ISSN: 1692-7257 - Volume 2 – Issue 48 - 2026

ORIGINAL

RCTA
Revista Colombiana de Tecnologías de Avanzada
UNIPAMPLONA

Development of an IoT prototype for automated irrigation in sustainable

Desarrollo de un prototipo IoT para la automatización del riego en invernaderos agrícolas sostenibles

Sergio Andrés Hurtado Vargas[1]
Diego Alejandro Gutiérrez Naranjo[1]
Javier Eduardo Martínez Baquero[1]

[1] **Universidad de los Llanos, Facultad de Ciencias Básicas e Ingeniería, Especialización en Instrumentación y Control Industrial, Villavicencio, Meta, Colombia.**

Received: 24 May 2026. Revised: 26 June 2026. Accepted: 10 July 2026. Published: 15 July 2026.
Corresponding Author: Javier Eduardo Martínez Baquero

How to cite: S. A. Hurtado Vargas, D. A. Gutiérrez Naranjo, and J. E. Martínez Baquero, "Desarrollo de un prototipo IoT para la automatización del riego en invernaderos agrícolas sostenibles", *Revista Colombiana de Tecnologías de Avanzada (RCTA)*, vol. 2, no. 48, jul. 2026, art. no. 4510, doi: 10.24054/rcta.v2i48.4510

This work is licensed under a Creative Commons Attribution-NonCommercial 4.0 International License.

Abstract:

Precision agriculture requires technological solutions that optimize water use and improve the monitoring of environmental variables in protected cropping systems. This study presents the design, implementation, and validation of an Internet of Things (IoT)-based prototype for automatic irrigation monitoring and control in a greenhouse dedicated to cilantro (Coriandrum sativum L.) cultivation. The proposed architecture integrates an ESP32 microcontroller as the central processing unit, DHT22 and DHT11 sensors for temperature and relative humidity measurement, an Autonics TK4S PID controller for thermal regulation, a DS1302 real-time clock (RTC) module for scheduling irrigation events, and an embedded web server that enables system monitoring and configuration through a local wireless network without relying on cloud-based services. Experimental validation was conducted over a continuous 24-hour period under both controlled and representative operating conditions, with environmental data acquired every five minutes and stored on an hourly basis. The results demonstrated stable system performance, achieving 100% availability, a solenoid valve response time of less than one second, no communication failures, and successful execution of all scheduled irrigation events. Environmental variables remained within suitable ranges for cilantro cultivation, with temperatures between 23.3 °C and 23.6 °C and relative humidity values ranging from 80% to 84%. Furthermore, comparison with a conventional irrigation strategy showed a 25.2% reduction in water consumption, a 37.5% decrease in the number of irrigation events, and a 25% reduction in pumping time. These findings demonstrate the technical feasibility of the proposed IoT architecture as a cost-effective solution for improving water-use efficiency and automated environmental monitoring in protected agriculture systems.

Keywords: automation, greenhouses, internet of things, prototype, sustainable agriculture.

Resumen:

La agricultura de precisión requiere soluciones tecnológicas que optimicen el uso del agua y mejoren el monitoreo de las variables ambientales en cultivos protegidos. Este trabajo presenta el diseño, implementación y validación de un prototipo IoT para el monitoreo y control automático del riego en un invernadero destinado al cultivo de cilantro (Coriandrum sativum L.). La arquitectura propuesta integra un microcontrolador ESP32 como nodo central, sensores DHT22 y DHT11 para la medición de temperatura y humedad relativa, un controlador PID Autonics TK4S para el control térmico, un módulo RTC DS1302 para la programación horaria y un servidor web embebido que permite la supervisión y configuración del sistema mediante una red local inalámbrica, sin dependencia de servicios en la nube. La validación experimental se realizó durante 24 horas bajo condiciones controladas y representativas de operación, con adquisición de datos cada cinco minutos y almacenamiento horario de información. Los resultados evidenciaron un funcionamiento estable del sistema, con disponibilidad del 100%, respuesta de la electroválvula inferior a un segundo, ausencia de pérdidas de comunicación y ejecución correcta de todos los eventos programados. Las variables ambientales permanecieron dentro de rangos adecuados para el cultivo de cilantro, registrándose temperaturas entre 23,3 °C y 23,6 °C y humedades relativas entre 80% y 84%. Asimismo, la comparación con un esquema convencional mostró una reducción del 25,2% en el consumo de agua, una disminución del 37,5% en el número de eventos de riego y una reducción del 25% en el tiempo de bombeo. Los resultados demuestran la viabilidad técnica de la arquitectura IoT propuesta como una alternativa de bajo costo para mejorar la eficiencia hídrica y el monitoreo automatizado en sistemas de agricultura protegida.

Palabras clave: agricultura sostenible, automatización, invernaderos, internet de las cosas, prototipo.

INTRODUCTION

Growing water scarcity, rising food demand and the effects of climate change have driven the development of smart systems to optimize the use of water resources in agriculture[1-2]. Although the Internet of Things (IoT) has proven to be a promising technology for crop monitoring and automation, its adoption by small and medium-sized producers remains limited due to implementation costs, dependence on communications infrastructure and the complexity of many reported architectures[3].

Recent literature has produced multiple IoT architectures aimed at smart irrigation. Some works focus mainly on the remote acquisition and visualization of environmental variables such as soil moisture, temperature and lighting through wireless networks and cloud platforms, enabling real-time supervision and historical data analysis[4].

Cilantro (Coriandrum sativum L.), also called coriander, is an annual herbaceous plant (it completes its life cycle in a single year) and is of high interest within agricultural production schemes. However, several studies have confirmed that high temperatures trigger a very common event called bolting or premature flowering, which reduces its commercial value and alters its flavor[5].

Other studies incorporate automatic control algorithms to optimize water supply and even integrate artificial intelligence and renewable energies, achieving significant improvements in water-use efficiency and energy efficiency[6-7].

Architectures based on Raspberry Pi, ESP32, LoRa and LoRaWAN have also been reported, which facilitate the connectivity of distributed sensors and the monitoring of agricultural greenhouses.

Its global importance is significant, with practices in countries such as Israel, Spain and Australia serving as examples. Even so, coordinated support from public policies is required, together with assertive risk communication and international collaboration, starting from developing countries[8].

In agriculture, Traditional Irrigation Systems (TIS) can be found, which are composed of a socio-technical-ecological structure and belong to the ancient and complex hydro-social systems that are water management infrastructures, maintained over the centuries; based on the study of different empirical cases, it is argued that specific cultural, social and economic contexts influence decision-making processes related to access to resources[9-10].

At first glance, one might conclude that the implementation of automated systems would depend solely on the supply of resources for the irrigation system, but in Colombia the reality is very different. Emphasis is placed on small farmers, who account for 70.8% of total agricultural production, which is a large number; however, only 2.4% are able to access this new technology called IoT. Of course, alternatives have been put forward that take these factors into account, through open-access platforms such as LoRa and LoRaWAN (Long Range Wide Area Network), with the municipality of San Cristóbal playing a leading role[11].

This low adoption of innovation is also evident in the Colombian Caribbean region due to the country's agricultural contextualization, which reveals traditional irrigation methods; nevertheless, 93% of the national eggplant production is found there, which indicates limited technification[12].

Along the same lines, a study conducted in Sesquilé, Cundinamarca, evaluated the regulated deficit irrigation (RDI) strategy in pear crops, demonstrating that it is possible to significantly reduce water application without compromising fruit yield or quality. The results showed osmotic adjustment mechanisms in the plants, which allowed them to cope with water restrictions during fruit growth without affecting productivity[13].

These limitations represent a relevant technological gap for precision agriculture, especially in contexts where the availability of digital infrastructure is limited and affordable, reliable and easily scalable solutions are required. Consequently, there is a need to develop IoT architectures that integrate data acquisition, automatic control, historical storage, intelligent alarm management and local supervision without depending on external services, guaranteeing operational continuity and ease of implementation[14-15].

In this sense, it is demonstrated that given the thermal conditions, especially due to soil factors and specific time slots such as the afternoon, their role is decisive for crop development, where ranges close to 28 °C and 32.5 °C contribute to appropriate growth[16].

Despite the advances reported in IoT systems for precision agriculture, most research is oriented toward remote monitoring of environmental variables or the automation of specific functions, often depending on cloud platforms, permanent communications infrastructure or high-cost architectures that limit their adoption by small and medium-sized producers.

Likewise, few studies integrate, in a single architecture, real-time monitoring, automatic irrigation control, local data storage, alarm management, event traceability and an embedded web interface that operates autonomously on local networks. In this context, the research problem consists of determining how to develop a low-cost IoT architecture that allows optimizing

irrigation in agricultural greenhouses through the reliable integration of sensors, actuators, control algorithms and supervision tools, without depending on external connectivity services[17].

For this reason, in cities with humid or warm climates, taking Villavicencio (Colombia) as a reference, where a major challenge arises due to its elevation on the Celsius scale, which conditions the pattern of cilantro behavior. Consequently, this work proposes and implements a functional prototype that seeks to close this technological gap, providing a scalable, autonomous solution adaptable to the conditions of small producers, strengthening water use efficiency and facilitating the incorporation of precision agriculture technologies in contexts with limited resources, in order to overcome the limitations identified in previous works through an autonomous, low-cost and easily replicable architecture aimed at optimizing water use and facilitating the adoption of precision agriculture technologies by small and medium-sized producers.

METHODOLOGY

In order to develop the automated prototype for irrigation in agricultural greenhouses, an applied methodology is used, which allows combining observation and analysis through different natural phenomena within said structure, so as to implement control of variables that allow verifying the cause-effect approach, by means of a network composed of stages that must start from a source of in-depth inquiry, to then proceed with the determination of technical criteria (design, assembly and programming) and agricultural criteria, to generate as a result the development of an IoT system.

The stages developed are detailed below.

Bibliographic review

The bibliographic review analyzed recent scientific articles on precision agriculture, smart irrigation, the Internet of Things (IoT) and greenhouse automation, which made it possible to identify technologies, architectures, sensors, protocols and control strategies, as well as to establish the research gap, the technical problem and the criteria that guided the design of the prototype.

Technical and agricultural parameters

The technical and agricultural parameters of the project were defined based on the requirements of the greenhouse crop and on the conditions necessary to guarantee efficient use of water resources. From a technical standpoint, the architecture was based on an ESP32 board as the central processing unit, DHT11 and DHT22 sensors for temperature and humidity monitoring, a DS1302 real-time clock (RTC) module for scheduling, a relay system for actuating the solenoid valve and an embedded web interface for local supervision and configuration.

Additionally, persistent storage, historical logging and alarm management mechanisms were implemented. In the agricultural sphere, temperature and humidity thresholds and irrigation schedules were established in accordance with the needs of the greenhouse crop, seeking to maintain stable environmental conditions, optimize water consumption, favor the physiological development of the plants and facilitate the experimental validation of the prototype under controlled conditions.

Design and development of the IoT system

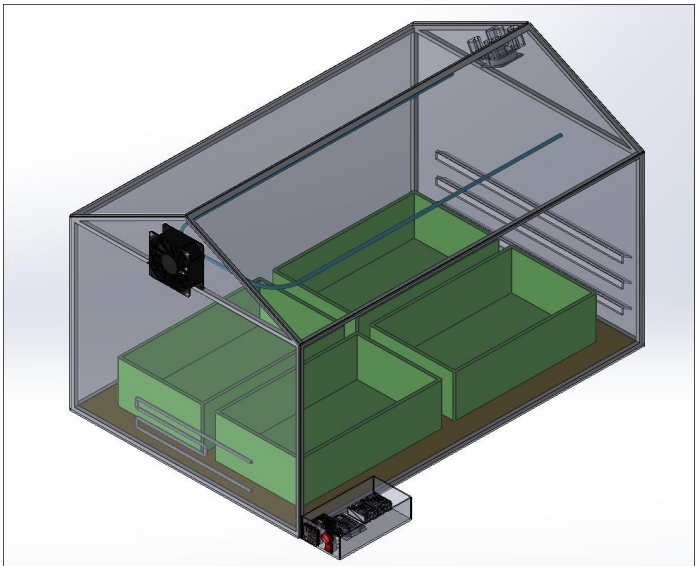

Fig. 1 3D design of the greenhouse.

Below, the design and three-dimensional drawings of the structure of the automated irrigation system made with the SolidWorks

application are presented. Fig. 1 shows the 3D design of the greenhouse.

Fig. 2 shows the surfaces of the proposed sketch, with front, side and top views added. Their purpose is to make the geometry of the prototype explicitly visible, supporting the understanding of the dimensions, spaces and location of the components.

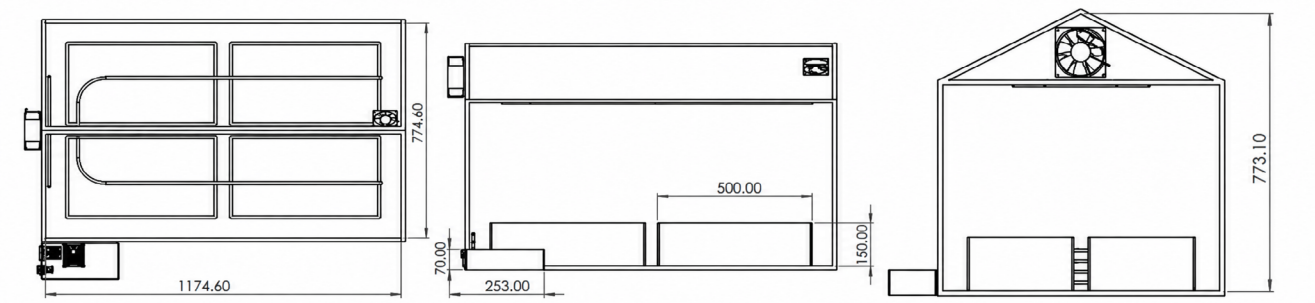

(a) Top view of the greenhouse. *(b) Side view of the greenhouse.* *(c) Front view of the greenhouse.*

Fig. 2. *Greenhouse plans.*

Assemblies and connections

Once the design was completed, the structure was assembled, as shown in Fig. 3, together with the connections of the sensors and actuators as shown in Fig. 4.

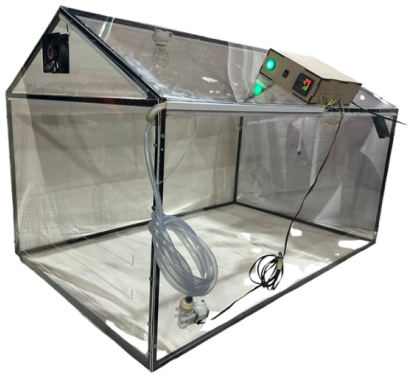

Fig. 3. *Assembled structure of the greenhouse prototype.*

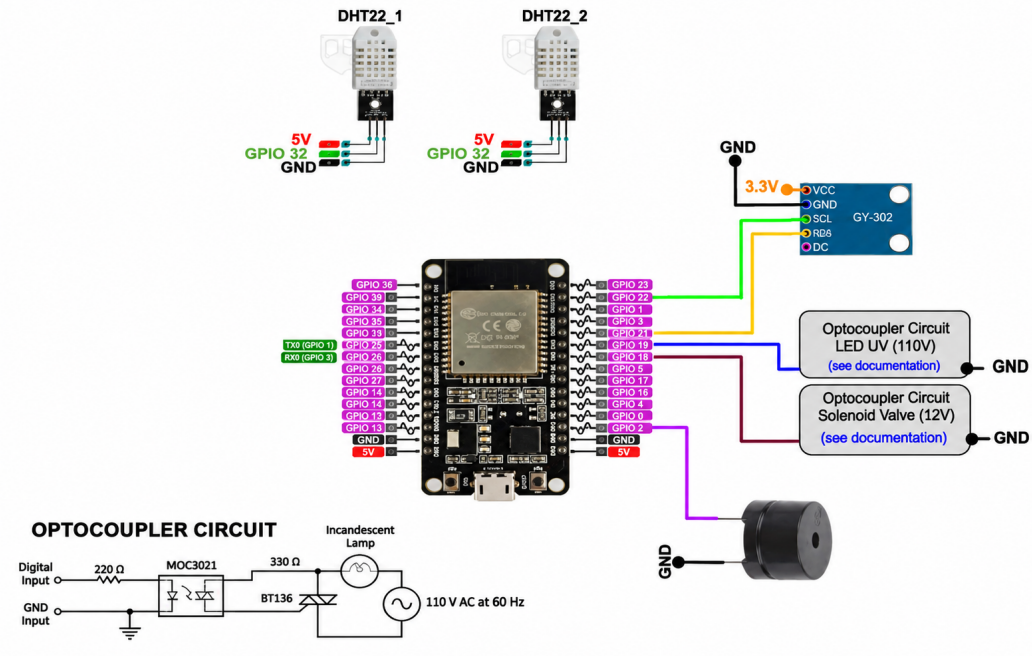

Fig. 4 Schematic circuit of the automatic irrigation system (sensors and actuators).

The instrumentation system consists of a DHT22 sensor installed in the main area of the greenhouse, given its higher accuracy (±0.5 °C and ±2% RH), for continuous monitoring of critical environmental variables, while the DHT11 sensors were used in secondary modules intended for tracking local crop conditions. The time reference is provided by a real-time clock (RTC) module DS1302 with backup battery, which guarantees the continuity of the scheduling even when the system is disconnected from the power supply.

Interface and communications

The greenhouse monitoring and irrigation system prototype was implemented using an ESP32 board, whose purpose is to be the center for data processing and transmission. The system was therefore developed in the Arduino IDE environment, using a variety of libraries that handle communication with sensors, transmission modules, and data reception.

Given the assigned pins, temperature, humidity and light intensity sensors were added, which provide key information for decision-making within the system, with the following respective models: a DHT11 sensor and a DHT22 sensor, for the supervision of environmental variables.

To manipulate time and schedule events, a real-time clock (RTC) adapter based on the DS1302 integrated circuit was used. This device keeps a record of the date and time, which is essential for establishing irrigation and lighting times within the mechanism.

The relay is also incorporated as an actuator, in order to activate irrigation with the solenoid valve. Its behavior depends on two important points: the first is its environmental factor and the second is the given programming logic (conditions). Fig. 5 shows the flowchart of the program in Arduino IDE.

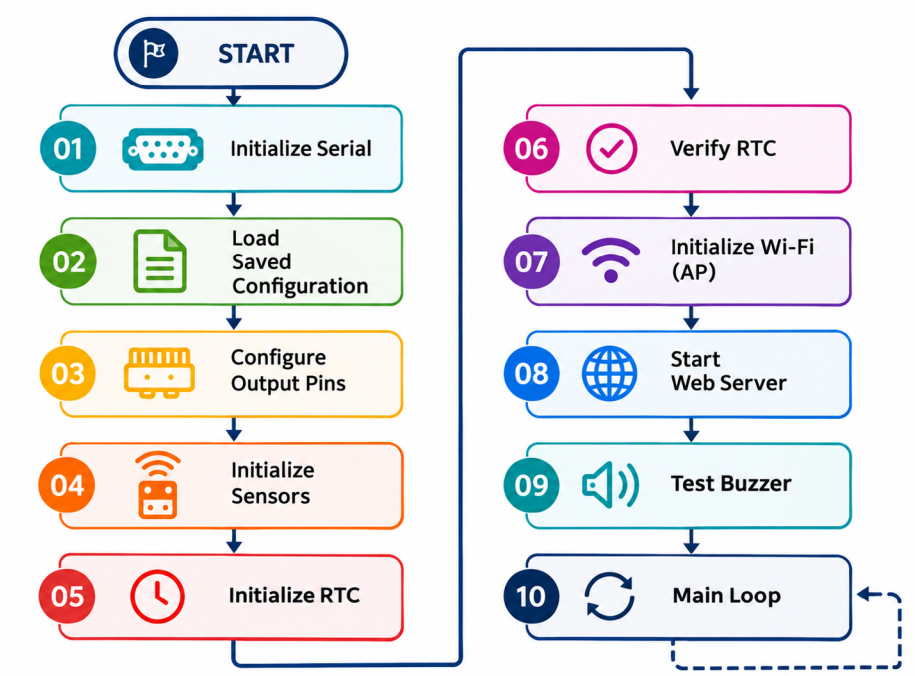

Fig. 5. *Flowchart of the program in Arduino IDE.*

For the IoT connection, the ESP32 was configured through the Access Point, which causes it to establish an independent local network, creating an advantage for the user when connecting directly from any device without having to remain connected to an internet network.

Likewise, the visualization and control of variables was attached to the web server, which is created by means of the WebServer library, enabling accessibility from the browser to carry out the real-time monitoring process. It should be noted that the communication protocols between the web interface and the system are based specifically on HTTP (Hypertext Transfer Protocol); in addition, the data were established as JSON (JavaScript Object Notation) type.

The aim is to put the data collected to use through a storage system, for which the Preferences library is used, so that the temperature and humidity thresholds and schedules can be used, preventing losses when each process resumes.

To keep a record of irrigation events, a structure called WaterEvent is defined, which keeps count of each irrigation performed, allowing the date, the exact start time and the irrigation interval in milliseconds to be saved. Its importance stands out in the

traceability that can be established in agricultural IoT projects. Within what is established in the web platform, the alarm system stands out due to the AlarmState evaluateAlarms() function; its task basically consists of analyzing all the sensors, determining the system status, where alert messages are sent indicating normal execution, or whether it has moved into an alert, critical or sensor failure phase.

Finally, the automatic control of irrigation depends on the environmental conditions defined as thresholds, which the user will be able to choose according to the need that arises. Fig. 6 shows the flowchart of the irrigation system.

For the communication diagram of the greenhouse prototype, shown in Fig. 7, the different functions were defined; the ESP32 has the role of being the central node, through the data acquisition from the humidity and temperature sensors to then manage the solenoid valve, which would be the actuator of the system. By means of a WiFi access path, clients have the possibility of connecting to the embedded web server to monitor live and make adjustments to the project with the help of the web interface [18].

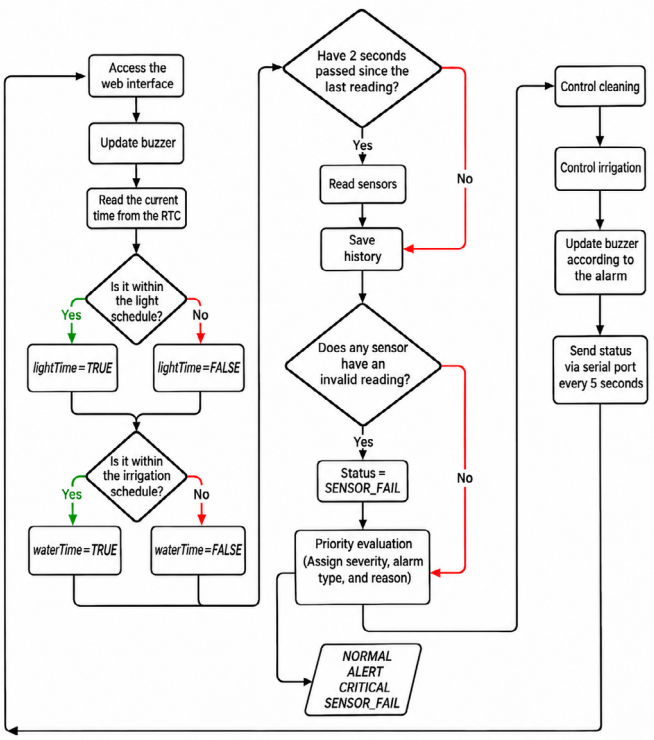

Fig. 6. *Irrigation system flowchart.*

The PID controller is characterized by being widely used in industry, since its architecture and implementation present great versatility and manageability. Likewise, it is very common to observe systems of this type in 95% of control loops, since their performance depends purely on the coupling of their three parameters, that is, the proportional, integral and derivative gains.

The criteria in a PID controller can be configured in two ways: the first bases its foundation on models, meaning that it focuses on identifying the structure and thresholds of the controlled plant in order to optimize it, but it can entail spending a great deal of time as well as not obtaining the expected results; and the second focuses on data, requiring only the input and output information of the system to determine the controller's constraints without expressly needing a model[19]. Equation (1) corresponds to the PID controller.

$$u(t) = Kpe(t) + \frac{Kp}{Ti}\int e(t)dt + KpTd\frac{d}{dt}e(t) \qquad (1)$$

TK4S temperature controller configuration

To control the temperature inside the greenhouse, the high-performance Autonics TK4S PID digital controller is used with a type K thermocouple to record the data. To take the reading, the controller must first be configured according to the manual, which shows the pin connections for the thermocouple; in this case, pins eleven and twelve are used, as shown in Fig. 8[20].

The system is then configured through the parameters, specifically number three, to adapt the device for the operation of the thermocouple. Table 1 below presents the restrictions:

Table 1: Parameters of the Autonics TK4S digital controller

Parameter 3	
Indicator	Configured value
Input type	K
Unit	°C
Offset	0 °C
Output Control	H - C
Control Type	P.P
Output 1	SSR (Heat)
Output 2	SSR (Cooling)
Heating Control Time	10.0 s
Cooling Control Time	10.0 s

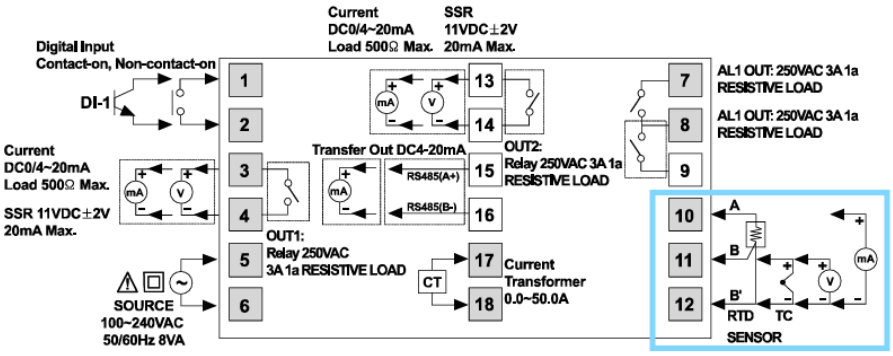

Fig. 8. *TK4S manual for the electrical connections of the TC to the controller.*

After the thresholds are established in the controller, the Auto-Tuning of the Autonics TK4S device is carried out (using parameter two), the setpoint is positioned at twenty-nine, and the corresponding record of the parameters obtained is made in Table 2.

Table 2: PID controller parameters obtained through the Auto-Tuning method

Parameter 2		
Controller	**Heating Value**	**Value Cooling**
Proportional	0,9	0,9
Integral	117	117
Derivative	24	24

Once the controller parameters were established in the previous section, Fig. 9 presents the step response of the PID control system.

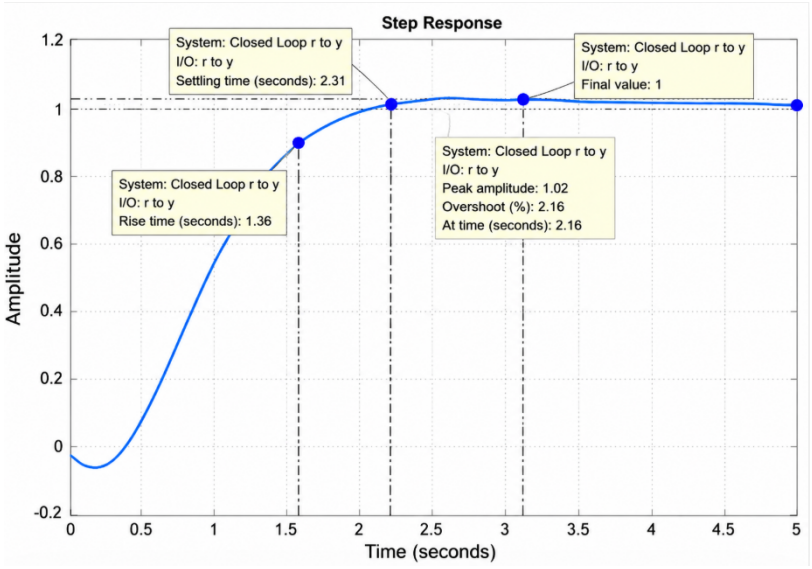

Fig. 9. *Step response of the PID controller.*

Validation

The prototype was validated in two complementary stages. In the first, tests were performed under controlled conditions inside the experimental greenhouse, where the environmental variables could be modified to verify the individual operation

of the sensors, actuators, control algorithms and supervision platform.

Subsequently, the system was evaluated under representative operating conditions, keeping the prototype in continuous operation for 24 hours, with environmental data acquisition every five minutes and storage of historical records every hour. This procedure made it possible to analyze the stability of the measurements, the availability of the embedded web server, the reliability of the wireless communication and the automatic response time of the system during a complete operating cycle without user intervention.

The controlled conditions consisted of simulating different operating scenarios, including changes in temperature, variations in relative humidity and intentional disconnection of sensors to verify the behavior of the control algorithm and the alarm system. In contrast, the representative operating conditions corresponded to normal operation of the prototype, in which irrigation decisions were executed automatically based on the thresholds configured by the user and the scheduling stored in the system.

Fig. 10 shows the execution of the data monitoring system, where the user's perspective is divided into the following stages.

The general section consists of the visualization of the overall system status within the main interface; a live summary is added with the data containing information relevant to the sensors and the control system. The clock is synchronized in real time (RTC), backing up the data history. The interface provides simultaneous viewing of temperature and humidity readings for different zones: the main greenhouse section, justified with the DHT22 sensor, and likewise the two remaining reference modules with DHT11.

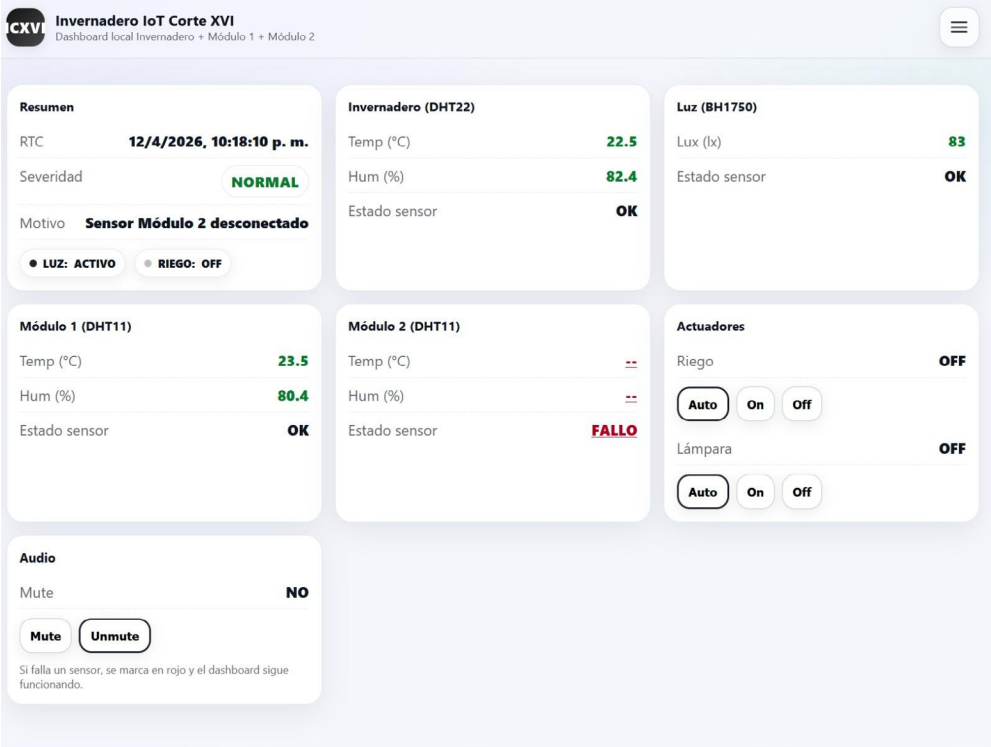

Fig. 10. *General interface of the IoT program for irrigation system control.*

The acquisition process occurs periodically depending on the defined time interval, and the data are then processed and displayed, and can be viewed even with decimal precision. In addition to the monitoring of the variables, a guide outputs two possible sensor states (OK/FAILURE) in the event that communication is lost; this is an industry version where faults can be detected so as not to compromise the integral operation of the system. The structure frequently evaluates the defined thresholds to actuate its actuator, which in this case is the lamp, applying control situations.

RESULTS

In actuator control, the system integrates both manual and automatic control for the actuators; through the digital platform, where the user can choose between the "Auto", "On" and "Off" options, their functionality stands out. For example, in automatic mode, activations are based on the environment and determined schedules, while in manual mode there is direct control by the user.

An alert emission controlled through a buzzer module is integrated, conditioned on the severity level detected in the system.

Likewise, the interface offers the option to activate or deactivate the signal, providing greater flexibility in its management in different environments, and its restrictions mean that the alarms are conditioned on the current system situation and the defined time settings.

Likewise, an alarm signal is added which, through a state categorization, will issue alerts depending on their severity and in relation to the established thresholds; for this, a function that evaluates the alarms was used, favoring the interpretation of the system's operation. It is emphasized that the system itself reflects the reason for the current condition in which it may be found, as observed in the case of Module 2, which has a sensor disconnection, as shown in Fig. 11.

As a reference item, it can be seen that the greenhouse system shows robust variability in the acquisition, analysis and sampling of real-time information; the addition of sensors and actuators, together with the centralized web server, represents the feasibility of pioneering local IoT proposals without the need for a cloud connection.

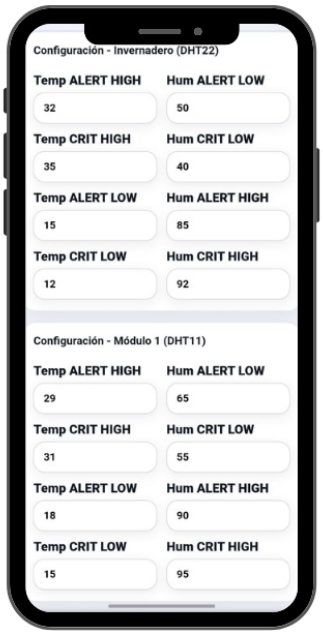

Fig. 11. *Threshold configuration interface for irrigation system control.*

Fig. 12 presents the schemes related to the change in the temperature, humidity and light level variables recorded over a twenty-four-hour period with a display frequency of one data point per hour, according to the structure implemented in the design. This storage-focused operation aims to analyze trends without filling the microcontroller memory, as already predefined in the programming through its historical record.

In the temperature graph, a clear difference is observed between the two measurement points: the greenhouse (GH) and Module 1 (M1). The main sensor (DHT22) shows stable values with an elevation difference, with minor variations within the range of 23.3 °C to 23.6 °C, consistent with its high precision. Meanwhile, the DHT11 module shows a more noticeable difference, which may be associated with its location within the greenhouse. The low variation of the data indicates that the system maintains a partially stable thermal condition; therefore, it is an expected behavior thanks to the implemented control logic.

Regarding humidity, it is divided into two identified levels that clearly differ as follows: the DHT22 sensor values oscillate close to 84%, whereas those of Module 1 are close to 80-83%. This categorization can clearly be interpreted as a tendency for humidity to exist within the system, due to the spread of irrigation and the operation of the fans. The oscillations presented have a low amplitude, from which it can be inferred that the variations occur progressively in accordance with the programmed control logic.

Finally, the results obtained show that the assembled model correctly performs data acquisition, clearly representing the critical variables of the greenhouse. The stability observed in the temperature and humidity findings is validated through sensor reading (readSensors()), historical storage (pushHistory5m() and maybeStoreHourSample()), and, in addition, the coupling of the control system.

The differentiation between devices such as temperature sensors reveals the possible technical limitations or restrictions that may arise, in this case the DHT11 sensor versus the DHT22, where precision and reliability often work against it. As a result, these data evaluate the implemented structure and confirm its applicability in IoT systems focused on precision agriculture.

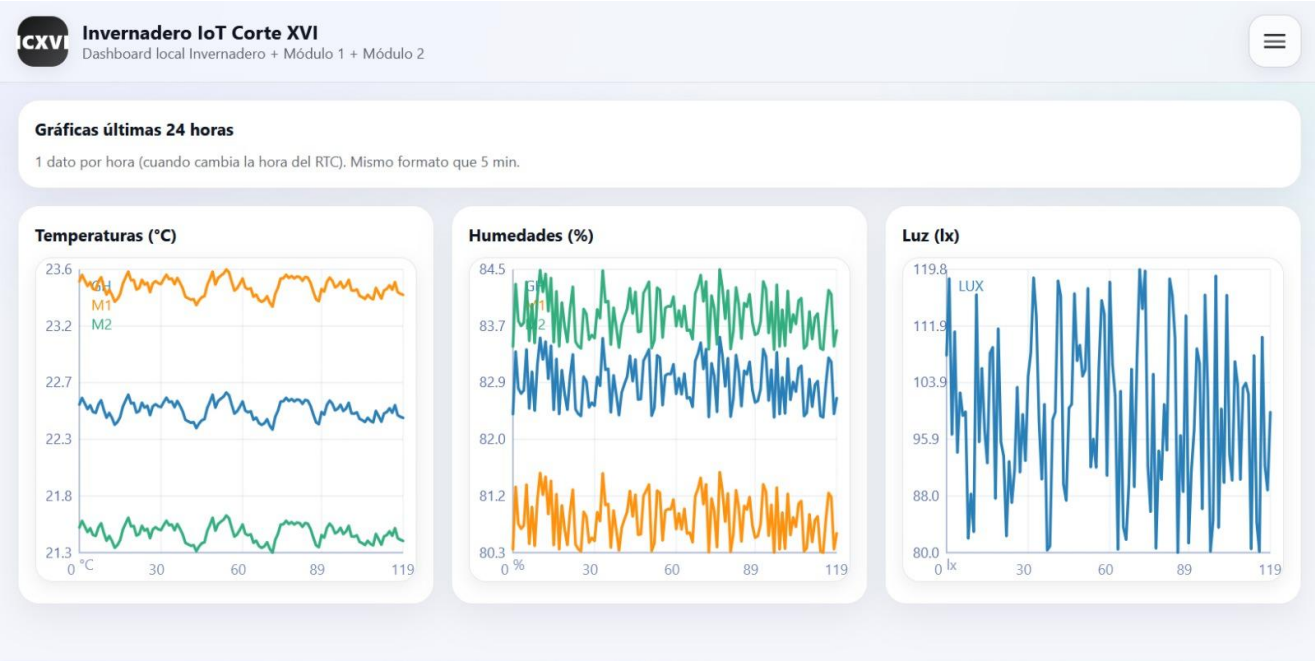

Fig. 12. *Variation of Environmental Variables.*

The results obtained show that the developed architecture maintains stable operation throughout the entire experimental cycle, making it possible to reduce unnecessary activations of the irrigation system, improve water use and guarantee the continuity of local supervision through the embedded web interface. Table 3 shows the performance indicators of the IoT system.

Table 3: Performance indicators of the IoT system

Indicator	Value obtained
Validation duration	24 h
Acquisition interval	5 min
Stored records	288
System availability	100%
Irrigation events successfully executed	100%
Average solenoid valve response time	< 1 s
Temperature error (DHT22)	±0.5 °C
Humidity error	±2 % RH
Communication failure	0 events
Alarms correctly detected	100%

Table 4 presents a comparison of water consumption.

Table 4: Comparison of water consumption

Variable	Conventional irrigation	IoT system	Indicator
Water used (L/day)	42.5	31.8	↓ 25.2%
Water savings (%)	—	25.2	Relative to conventional
Number of irrigation events	8	5	↓ 37.5%
Total pumping time (min/day)	72	54	↓ 25.0%

Water savings were calculated using equation (2).

$$\text{Ahorro agua (\%)} = \frac{Vconv - VIoT}{Vconv} x\ 100\% \quad (2)$$

The main scientific contribution is an integrated IoT architecture based on ESP32 that combines real-time monitoring, automatic irrigation, historical storage, alarm management and an embedded web server, without depending on the cloud. Its scalable, reliable and low-cost design strengthens precision agriculture for small producers.

Using an embedded web server, local storage, a dedicated wireless network and commercial electronic components eliminates dependence on external platforms, reduces operating costs and makes the system easier to replicate in different protected agriculture scenarios.

CONCLUSIONS

An IoT prototype for the monitoring and automatic control of irrigation in a greenhouse was designed and implemented, integrating environmental sensors, an ESP32 microcontroller, a PID controller for temperature regulation, local data storage

and an embedded web server for remote supervision and configuration. The experimental tests carried out during a continuous 24-hour cycle showed the stable operation of the proposed architecture, with 100% system availability, no communication losses and correct execution of the scheduled events.

The experimental results showed that the system maintained stable environmental conditions during the evaluation period, with temperatures between 23.3 °C and 23.6 °C and relative humidities between 80% and 84%, values compatible with the ranges recommended for the development of the cilantro crop under protected agriculture conditions. The use of the DHT22 sensor also provided more stable measurements than those provided by the DHT11 sensors, confirming the influence of instrumental precision on the performance of the monitoring system.

The comparison with a conventional irrigation scheme showed a decrease in the volume of water supplied, a reduction in the number of irrigation events, and a shorter accumulated operating time of the pumping system, results that support the potential of the IoT architecture to optimize water resource management in small-scale greenhouses. However, these results correspond exclusively to the experimental conditions evaluated and do not allow generalizing the performance of the system to other crops, production scales, or climatic conditions without additional validation processes.

Among the main limitations of the study are the duration of the experimental validation, restricted to a 24-hour period, the evaluation on a single crop, and the absence of prolonged tests under different seasonal and operational conditions. Consequently, the scope of the proposed solution is limited to demonstrating the technical and functional feasibility of a low-cost IoT architecture for the monitoring and automated control of irrigation. As future work, it is recommended to develop longer experimental campaigns, incorporate soil moisture and flow sensors to directly quantify water-use efficiency, and validate the system in larger-scale greenhouses and with different agricultural species.

REFERENCES

[1] G. Pizzileo, L. Colizzi, E. Guerriero, T. Adamo, and M. V. Chiriacò, “Resource use efficiency and environmental sustainability in greenhouse agriculture through IoT-based irrigation and fertilization management,” *Smart Agric. Technol.*, vol. 12, p. 101180, 2025, doi: https://doi.org/10.1016/j.atech.2025.101180.

[2] J. I. Saez Rojas, J. M. Pantoja, M. Matamala, I. C. Briceño, J. P. Vásconez, and A. R. Romero-Conrado, “An IoT-Based Prototype for Optimizing Agricultural Irrigation: A Case Study in the Biobío Region of Chile,” *Procedia Comput. Sci.*, vol. 238, pp. 1009–1014, 2024, doi: https://doi.org/10.1016/j.procs.2024.06.127.

[3] D. A. Riaño-Herrera, D. A. Varela-Martínez, J. G. Chenet, D. A. García-García, S. D. Díaz-Verus, and L. Rodríguez-Urrego, “Driving sustainable urban development: Exploring the role of small-scale organic urban agriculture in Bogotá, Colombia: A case study,” *Sustain. Cities Soc.*, vol. 99, p. 104919, 2023, doi: https://doi.org/10.1016/j.scs.2023.104919.

[4] Q. Mamun, A. Zaman, R. H. L. Ip, and K. M. S. Haque, “A bibliographic study of integrating IoT and geospatial modelling for sustainable smart agriculture in developed countries: Focus on Australia,” *Comput. Electron. Agric.*, vol. 241, p. 111289, 2026, doi: https://doi.org/10.1016/j.compag.2025.111289.

[5] B. Meyering, A. Hoeffner, and U. Albrecht, “Reducing Preharvest Bolting in Open-field-grown Cilantro (Coriandrum sativum L. cv. Santo) through Use of Growth Regulators,” *HortScience*, vol. 55, no. 1, pp. 63–70, 2019, doi: 10.21273/HORTSCI14614-19.

[6] S. Banluesapy, M. Ketcham, and M. Rattanasiriwongwut, “AI-Augmented Smart Irrigation System Using IoT and Solar Power for Sustainable Water and Energy Management,” *Energy Eng.*, vol. 122, no. 10, pp. 4261–4296, 2025, doi: https://doi.org/10.32604/ee.2025.068422

[7] E. M. Correa-Álvarez, “Characterization of eggplant producers in the Caribbean region of Colombia: socio-economic aspects and local production technology”, *Agron. Colomb.*, vol. 38, no. 1, pp. 120–132, Jan. 2020. https://doi.org/doi:10.15446/agron.colomb.v38n1.80706.

[8] O. V. Obayomi, R. Attah, S. M. S. Sayem, L. S. Mustapha, S. O. Kolade, and K. S. Obayomi, “Sustainable agriculture in the face of water scarcity: Opportunities, challenges, and global perspectives,” *Next Res.*, vol. 5, p. 101293, 2026, doi: https://doi.org/10.1016/j.nexres.2025.101293

[9] J. Höhl, J. Dame, and A. Videla-Oyarzo, “Exploring water (in)securities in a water-abundant setting: hydrosocial dynamics and local strategies in Central-South Chile,” *Geoforum*, vol. 166, p. 104423, 2025, doi: https://doi.org/10.1016/j.geoforum.2025.104423.

[10] C. da-Silva-Branco, A. G. de Brito, and P. C. Seixas, “A comprehensive review of traditional irrigation systems: Sustainability and future prospects,” *Agric. Syst.*, vol. 231, p. 104481, 2026, doi: https://doi.org/10.1016/j.agsy.2025.104481.

[11] A. C. Moreno-Hernández, J. E. Vélez-Sánchez, and D. S. Intrigliolo, “Effect of deficit irrigation on yield and quality of pear (Pyrus communis cv. Triumph of Vienna)”, *Agron. Colomb.*, vol. 35, no. 3, pp. 350–356, Sep. 2017. https://doi.org/10.15446/agron.colomb.v35n3.64313

[12] S. Gupta et al., “Smart agriculture using IoT for automated irrigation, water and energy efficiency,” *Smart Agric. Technol.*, vol. 12, p. 101081, 2025, doi: https://doi.org/10.1016/j.atech.2025.101081.

[13] P. Pereira, M. Inacio, D. Barcelo, and W. Zhao, “Impacts of agriculture intensification on biodiversity loss, climate change and ecosystem services,” *Curr. Opin. Environ. Sci. Heal.*, vol. 46, p. 100637, 2025, doi: https://doi.org/10.1016/j.coesh.2025.100637.

[14] V. S. J. Pitoro, C. A. de Amorim, J. R. Franco, and R. M. Sánchez-Román, “Application of low-cost soil moisture sensors for

irrigation management in Brassica oleracea var. acephala cultivation," *Smart Agric. Technol.*, vol. 12, p. 101596, 2025, doi: https://doi.org/10.1016/j.atech.2025.101596.

[15] P. Arregoces-Guerra, J. F. Restrepo-Arias, M. Usme Martinez, J. P. Montoya-Yepes, and J. W. Branch-Bedoya, "Monitoreo de cultivos bajo invernadero utilizando tecnologías 4.0," *Rev. Cienc. y Tecnol. Agropecu.*, vol. 24, no. 2, 2023, doi: 10.21930/rcta.vol24_num2_art:2853.

[16] C. Sarada, Giridhar Kalidasu, T. Yellaman Da Reddy, And P. Venkata Reddy, "Weather modification for off-season production of coriander (Coriandrum sativum L.) for leaf", *J. Agrometeorol.*, vol. 13, no. 1, pp. 54–57, Jun. 2011. doi: https://doi.org/

[17] D. M. Matilla, Á. L. Murciego, D. M. J. Bravo, A. S. Mendes, and V. R. Q. Leithardt, "Low cost center pivot irrigation monitoring systems based on IoT and LoRaWAN technologies," in 2020 IEEE International Workshop on Metrology for Agriculture and Forestry (MetroAgriFor), 2020, pp. 262–267. doi: 10.1109/MetroAgriFor50201.2020.9277548

[18] S. Li, "Application of the Internet of Things Technology in Precision Agriculture IRrigation Systems," in 2012 International Conference on Computer Science and Service System, 2012, pp. 1009–1013. doi: 10.1109/CSSS.2012.256.

[19] N. Liu et al., "Data-driven anti-windup adaptive PID control without persistent excitation," *Control Eng. Pract.*, vol. 173, p. 106974, 2026, doi: https://doi.org/10.1016/j.conengprac.2026.106974.

[20] M. Fakhruddin, Y. Yuniarto, P. Ari Bawono, W. Heru, A. Eko, and T. Dista Yoel, "Realization of industrial based temperature heating control module using TK4S-T4RN," *Mater. Today Proc.*, vol. 63, pp. S424–S433, 2022, doi: https://doi.org/10.1016/j.matpr.2022.04.088.

ACKNOWLEDGMENTS

The authors thank the Universidad de Los Llanos and the Specialization in Instrumentation and Industrial Control for their support in carrying out this project.

FUNDING

No financing

CONFLICT OF INTEREST

None

AUTHORSHIP CONTRIBUTIONS

Drafting – original draft: Sergio Andrés Hurtado Vargas, Diego Alejandro Gutiérrez Naranjo, Javier Eduardo Martínez Baquero.

Writing–review and editing: Sergio Andrés Hurtado Vargas, Diego Alejandro Gutiérrez Naranjo, Javier Eduardo Martínez Baquero.