ISSN: 1692-7257 - Volume 2 – Issue 48 - 2026

ORIGINAL

RCTA
Revista Colombiana de Tecnologías de Avanzada
UNIPAMPLONA

Design of an EMG acquisition system oriented to the development of myoelectric prostheses

Diseño de un sistema de adquisición EMG orientado al desarrollo de prótesis mioeléctricas

Yeison Manuel Arias Nuñez[1]
Sandra Patricia Usaquen Perilla[1]
Mauricio Alejandro Gómez Figueroa[1]

[1] **Universidad Militar Nueva Granada, Facultad de Ingeniería, Bogotá, Colombia.**

Received: 06 April 2026. Revised: 16 June 2026. Accepted: 25 July 2026. Published: 29 July 2026.
Corresponding Author: Mauricio Alejandro Gómez Figueroa

How to cite: Y. M. Arias Nuñez, S. P. Usaquen Perilla, and M. A. Gómez Figueroa, "Diseño de un sistema de adquisición EMG orientado al desarrollo de prótesis mioeléctricas", *Revista Colombiana de Tecnologías de Avanzada (RCTA)*, vol. 2, no. 48, jul. 2026, art. no. 4406, doi: 10.24054/rcta.v2i48.4406

This work is licensed under a Creative Commons Attribution-NonCommercial 4.0 International License.

Abstract:

This article describes the development and implementation of electromyography (EMG) signal acquisition and processing for the control stage of a myoelectric prosthesis. A method is established for detecting and classifying muscle activity with low computational load and high reproducibility, using a hybrid analog-digital architecture. The EMG signal passes through a passive RC low-pass filter and then to a window comparator circuit with LM393 integrated circuits, which classifies the electrical activity into three levels: rest, contraction, or partial contraction. This classification generates pulse-width modulation (PWM) signals for servomotor control. The implementation of a digital Butterworth bandpass filter results in output voltages of 0.1 V, which can be amplified to obtain a 1.9 V voltage for servomotor activation. This fulfills the objective of generating the dynamics of an actuator with low-cost components, with the possibility of increasing the number of actuators due to the use of a Raspberry Pi 4, which has input/output ports.

Keywords: rehabilitation engineering, signal conditioning, surface electromyography (sEMG), embedded systems, servomotor, Raspberry Pi.

Resumen:

Este artículo describe el desarrollo e implementación de la adquisición y el procesamiento de señales de electromiografía (EMG) para la etapa de control de una prótesis mioeléctrica. Se establece un método para detectar y clasificar la actividad muscular con baja carga computacional y alta reproducibilidad, utilizando una arquitectura híbrida analógica-digital. La señal EMG pasa a través de un filtro pasivo RC de paso bajo y luego a un circuito comparador de ventana con circuitos integrados LM393, que clasifica la actividad eléctrica en tres niveles: reposo, contracción o contracción parcial. Esta clasificación genera señales de modulación por ancho de pulso (PWM) para el control del servomotor, teniendo como resultado de la implementación de filtro pasabanda Butterworth digital obteniendo valores de voltaje 0.1 V a la salida que pueden ser amplificados y obtener para la activación del servomotor un voltaje de 1.9 V, cumplido con el objetivo que es generar la dinámica de un actuador con elementos de bajo costo con posibilidad de aumentar el número de actuadores debido al uso de Raspberry Pi 4 que cuenta con puertos de entrada y salida.

Palabras clave: ingeniería de rehabilitación, acondicionamiento de señales, electromiografía de superficie (sEMG), sistemas embebidos, servomotor, Raspberry Pi.

INTRODUCTION

Upper limb amputation is a pathology that negatively affects the functionality, quality of life, and autonomy of those who suffer from it. The most frequent causes of amputation include trauma, vascular diseases, infections, tumors, and congenital malformations. In developing countries such as Colombia, amputee patients face difficulties in accessing prostheses because of the lack of rehabilitation technology and the high cost of the most advanced prostheses. In this context, myoelectric prostheses have emerged as an interesting alternative, since they can record surface electromyography (EMG) signals of muscle activity to control mechanical actuators and other mechanisms. Several studies have demonstrated a relationship between EMG signals and muscle activation, which has led to their use as an interface between the neuromuscular system and prosthetic devices[1],[2].

EMG signals present several challenges due to their low amplitudes (from 50µV to 5mV), their high sensitivity to noise and their variability between users and measurement conditions. Therefore, they require conditioning, filtering and processing stages to improve the signal quality and facilitate its interpretation [2], [3]. In recent years, various techniques for processing and classification of EMG signals have been proposed, including basic machine learning and deep learning methods that have achieved high accuracy in the recognition of gestures and muscle patterns [4], [5], [6].

However, the architectures presented are usually associated with high computational complexity, the need for large volumes of data for adequate training, and greater hardware requirements, which can limit their integration into low-cost embedded systems [7], [8], [9]. Simplified architectures that use analog conditioning techniques and discrete classification strategies have also been proposed, reducing the computational load without compromising system performance [10].

In addition, the use of low-cost embedded platforms such as the Raspberry Pi (which offers excellent microcontroller performance) has enabled the development of very low-cost systems for the acquisition, control, and real-time processing of biomedical signals[11],[12]. Indeed, these integrated platforms offer a flexible and scalable solution for implementing support systems and devices in academic and research settings.

Despite these advances, challenges persist regarding the stability of the system signal and the reliable identification of muscle activation states in operational situations[13]. In addition, this work proposes the design and prototyping of an EMG signal acquisition and control system based on a very low-cost hybrid analog-digital architecture, which allows the discrete classification of muscle contraction states and their common use in the control of myoelectric prostheses.

MATERIALS AND METHODS

System architecture

The proposed system combines analog and digital stages to acquire, classify, and control sEMG signals intended for future applications in myoelectric prostheses.

As shown in Fig. 1, the architecture consists of a surface EMG sensor, an analog conditioning stage, a window comparator using the LM393, an MCP3008 analog-to-digital converter, a processing unit running Python on a Raspberry Pi 4, and an INJORA servomotor as the final actuator. The EMG signal, used as a reference by the biceps muscle, is captured by surface electrodes and conditioned to improve its stability. The comparator reads the signal and classifies the muscle contraction levels. This same signal is discretized for storage, and the Raspberry Pi 4, through programming, can identify the detected states and send control signals to the actuator.

The EMG signal acquisition process was carried out using a commercial EGBO surface module, which is based on the Muscle Sensor v3 architecture from Advancer Technologies. This device uses several analog conditioning stages consisting of an AD8226 reference instrumentation amplifier for the acquisition of low-amplitude signals with a typical common-mode rejection ratio (CMRR) of 90 dB with a gain-bandwidth product of around 1 MHz, adjustable gain from 1 to 1,000; it then passes to a TL084 reference full-wave rectifier operational amplifier (OA) configuration from the FET family; a first-order low-pass filter with an Fc = 1.98 Hz inverter responsible for reducing signal noise, then passes to an inverting amplifier stage with adjustable gain from 1 to 207.

The TL084, characterized by a high input impedance, with a typical CMRR of 86 dB and a gain-bandwidth product of around 4 MHz, which are characteristics that favor the acquisition of low-amplitude biomedical signals[14].

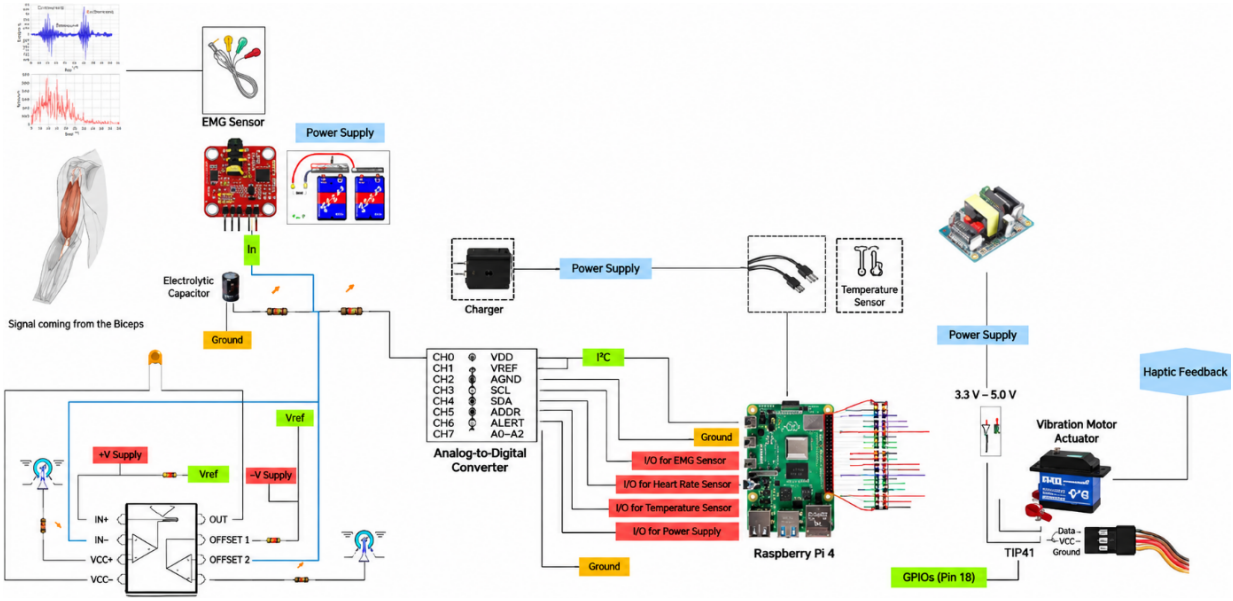

Fig. 1. *General diagram of the EMG signal acquisition and myoelectric control system.*
Source: own elaboration.

The analog conditioning of the acquired signal was implemented using an RC low-pass filter, whose behavior was specifically designed to attenuate high-frequency noise and highlight the envelope of the EMG signal, providing sufficiently representative information to detect the muscle contraction levels in a specific muscle area[15]. The filter cutoff frequency was calculated using the following relationship:

$$fc = \frac{1}{2\pi RC} \quad (1)$$

where R and C represent the resistance and capacitance of the circuit, respectively. For the proposed system, values of R = 56 kΩ and C = 22 nF were selected, yielding an approximate cutoff frequency of 129 Hz. The selection of this value made it possible to keep the analog filtering within the frequency range of interest for surface electromyographic signals, whose useful spectral content is typically between 20 Hz and 500 Hz, while simultaneously reducing high-frequency noise components before signal digitization. Because the EGBO module already incorporates amplification and analog conditioning stages internally, the RC filter implemented in this work acted as a complementary stage prior to the acquisition process.

The digitized signal from the MCP3008 analog-to-digital converter was then processed on the Raspberry Pi 4. A 100 nF decoupling capacitor was also added to the comparison stage to improve operational stability and reduce the influence of high-frequency noise[12].

The electronic design was verified by simulation in Proteus, as shown in Fig. 2.

A window comparator was built using the LM393 integrated circuit. Two reference levels were set with 10KΩ potentiometers configured as voltage dividers between 3.3V and ground. The variable terminals of the potentiometers were connected to the reference inputs of the comparator, thus establishing the lower threshold (TH1) and the upper threshold (TH2). The unfiltered signal was applied simultaneously to both comparator inputs and evaluated against the defined reference levels. This configuration allows the signal to be classified into the following muscle activation states: rest, slight contraction and strong contraction. The threshold values were adjusted experimentally according to the amplitude of the acquired EMG signal. Typical ranges were approximately 0.4V for rest, 0.8V for slight contraction and up to 1.9V for strong contraction.

These ranges provided a clear separation between states and improved the stability of the system against variations in the signal. Fig. 3 illustrates the physical implementation, which includes the EMG sensor, the breadboard conditioning stage, the MCP3008 converter, the Raspberry Pi 4 and the servomotor.

An MCP3008 analog-to-digital converter was used to digitize the signal, communicating with the Raspberry Pi 4 via the SPI protocol. Note that the digitized signal was used exclusively for monitoring and data storage, whereas contraction states were classified directly by the analog comparator. The actuator was controlled by an INJORA servomotor driven by PWM signals generated by the Raspberry Pi 4. The actuator was selected on the basis of its rated torque capacity, which was sufficient to demonstrate the operation of the system under laboratory conditions.

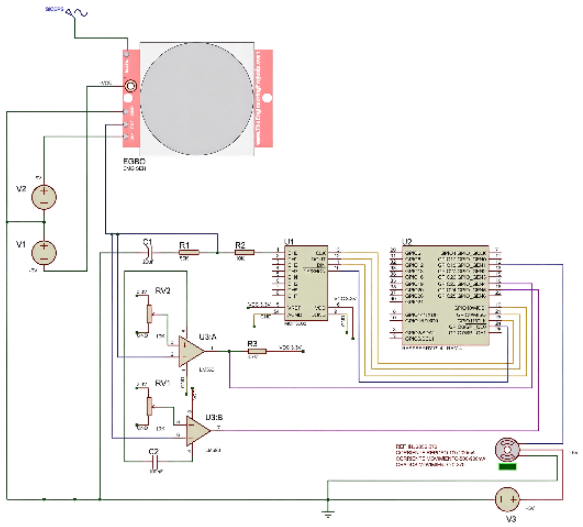

Fig. 2. *Schematic of the conditioning and classification circuit implemented in Proteus.*
Source: own elaboration.

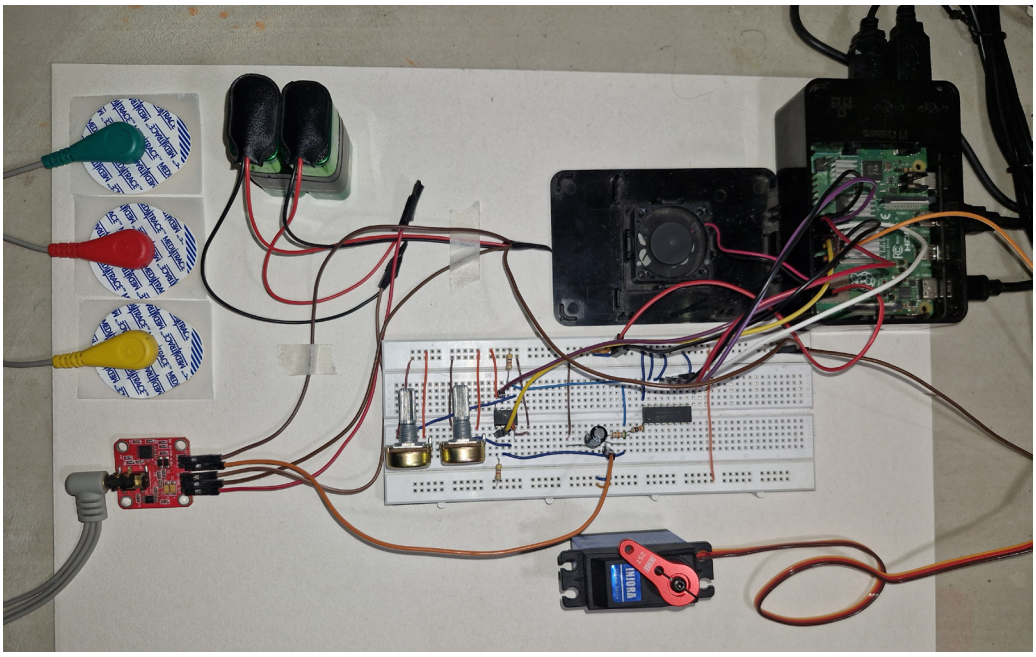

Fig. 3 Experimental setup of the proposed system, showing the EMG electrodes, the sensor module, the LM393-based conditioning and comparison circuit, the MCP3008 converter, the Raspberry Pi 4 and the servomotor used as actuator.
Source: own elaboration.

Signal acquisition and processing

The electromyographic signal was acquired using channel 0 of the MCP3008 analog-to-digital converter, configured with a resolution of 10 bits and a reference voltage of 3.3V. This converter communicates with the Raspberry Pi 4 through the SPI protocol, allowing continuous reading of the conditioned analog signal.

Once digitized, the signal was processed with a fourth-order Butterworth band-pass filter implemented in software, with a lower cutoff frequency of 20 Hz and an upper cutoff frequency of 500 Hz. This range was selected because the useful spectral content of surface electromyographic signals lies predominantly between these frequencies. The filtering attenuated the very low-frequency components associated with movement artifacts and baseline variations and reduced the high-frequency components related to electrical noise and interference from the acquisition system, improving the signal-to-noise ratio for the analysis of muscle activity. It should be noted that the digitized signal was not used for decision-making by the control system; the classification of muscle contraction levels was performed using an analog comparator with an LM393, which

separated control processing from signal monitoring and thereby reduced the computational load on the Raspberry Pi 4. Data acquisition was performed at an approximate sampling frequency of 50 Hz, sufficient to track the envelope of the EMG signal as it passed through the low-pass filter.

The system was run in Python, using the spidev libraries for SPI communication with the MCP3008, GPIO to read the digital outputs of the LM393 comparator and the PWM control of the servomotor, and Matplotlib for the real-time representation of the acquired signal; the data are downloaded in csv format for storage of the experimental data. The MCP3008 was configured using SPI bus 0 and device 0, with a maximum communication speed of 1.35 MHz. The conditioned signal from the EMG module was acquired using channel CH0 of the converter and converted to voltage values at that instant using a voltage of 3.3 V.

Voltage measured experimentally with a multimeter (V)	OUT1 (LM393)	OUT2 (LM393)	Classified muscle state	Description
≤ 0.4 V (Measured experimentally with a multimeter)	1	1	**Rest**	Absence of muscle activation.
0.4 V – 0.8 V (Measured experimentally with a multimeter)	0	1	**Slight contraction**	Moderate muscle activation.
0.8 V – 1.9 V (Measured experimentally with a multimeter)	0	0	**Strong contraction**	Maximum muscle activation.
> 0.8 V and < 1.9 V (Measured experimentally with a multimeter)	1	0	**Slight contraction (stability criterion)**	Transient state due to signal fluctuations. It is classified as a slight contraction to ensure system stability.

Table 1: *Voltage values obtained experimentally during the calibration of the system, together with the logic combinations generated by the LM393 comparator and their corresponding classification of the muscle states.*
Source: own elaboration.

Servomotor control

The actuator system was designed using an INJORA servomotor, controlled by PWM signals generated by a Raspberry Pi 4. The PWM signal was configured at a frequency of 50 Hz, the operating frequency for this type of device.

Three angular positions were defined, corresponding to the contraction states defined previously: 0° for the rest state, 45° for medium contraction and 90° for maximum contraction. To stabilize the control and eliminate unwanted oscillations in the actuator, a temporal validation algorithm was included. The system operates with a sampling frequency of approximately 50 Hz (interval of 0.02 s), continuously evaluating the outputs of the comparator.

A state change is accepted only if it remains constant for five consecutive samples, which implies a minimum validation time of approximately 0.1 s. In addition, minimum dwell times were defined for each state: 0.20 s at rest, 0.30 s during medium contraction, and 0.80 s when the maximum value is reached during muscle contraction. This strategy makes it possible to distinguish transient variations of the signal (noise or short peaks) from a sustained contraction and significantly reduces the erratic behavior of the servomotor.

A Thonny-Python application was created to acquire and store the electromyographic signal in real time. The signal, converted to digital format by the MCP3008, is processed and plotted using the Matplotlib library, which allows the graphical representation of the dynamic behavior of the signal under different muscle contraction conditions. The visualization is shown in an interactive window, where the signal is continuously updated based on the acquired samples, which allows identifying patterns derived from the rest, medium contraction, and maximum contraction states. The data are stored in CSV files, which contain information such as the acquisition time, the digital value of the ADC, the corresponding voltage, the comparator outputs (OUT1 and OUT2), and the contraction state identified by the system.

Data visualization and storage

RESULTS

The experimental setup used to validate the system is shown in Fig. 3, while the circuit-level implementation is detailed in Fig. 2. Both setups allowed us to verify the behavior of the system under different muscle activation conditions during the analog conditioning stage and during the full integration of the classification and control system.

EMG signal conditioning

Fig. 4 presents the comparison between the EMG signal acquired before and after the analog conditioning by means of the RC filter implemented in the system. The superposition of both signals shows that filtering reduces fast fluctuations and high-frequency components, yielding a more stable envelope that facilitates the identification of the different levels of muscle activation. Although the amplitude of the signal decreases slightly due to the smoothing process, the information necessary for the classification of the rest, light contraction, and strong contraction states is preserved.

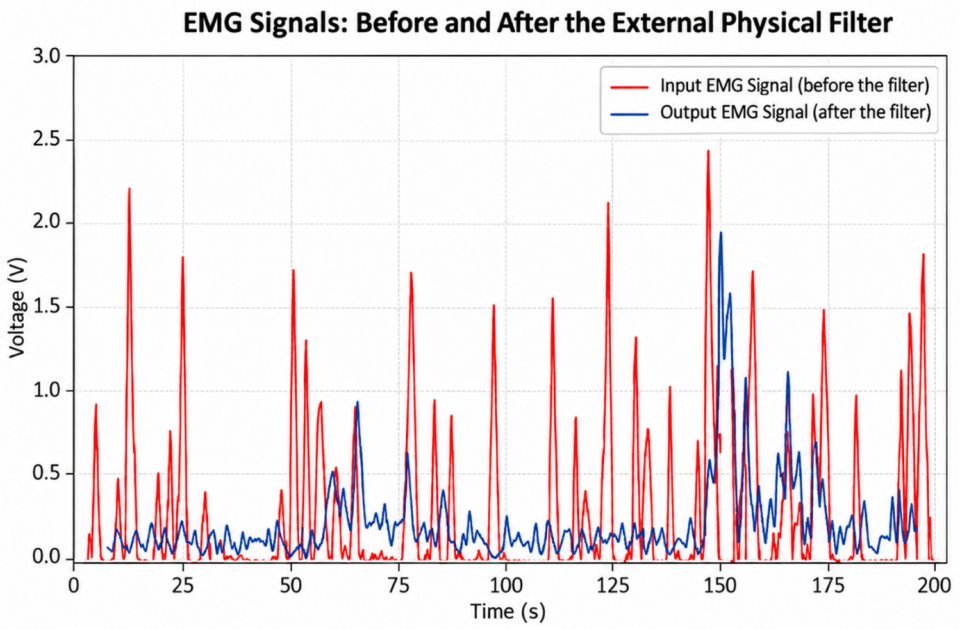

Fig. 4. *Comparison of the EMG signal acquired before and after external physical filtering by means of a low-pass RC filter.*
Source: own elaboration.

In order to analyze the effect of conditioning from the frequency domain, Fig. 5 shows the comparison of the spectrum of the EMG signal before and after the combined filtering, consisting of the analog RC filter and a Butterworth band-pass filter implemented digitally with cutoff frequencies of 20 Hz and 500 Hz. It is observed that filtering attenuates the very low-frequency components, mainly associated with baseline drift and motion artifacts, as well as the high-frequency components related to electrical noise, while preserving most of the useful spectral content of the electromyographic signal.

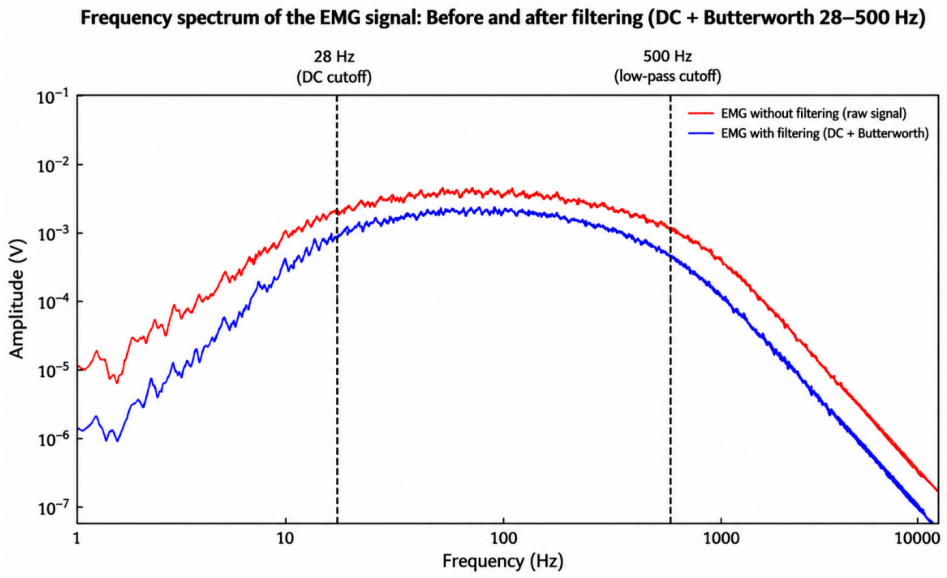

Fig. 5. *Comparison of the frequency spectrum of the EMG signal before and after the filtering process using an RC filter and a digital Butterworth bandpass filter.*
Source: own elaboration.

As a result of the conditioning and filtering process, the signal used by the system shows a more stable response and a better signal-to-noise ratio, allowing more reliable detection of muscle activation levels. These characteristics facilitated the experimental adjustment of the thresholds used by the LM393 comparator to discriminate the three operating states of the system: rest, mild contraction, and strong contraction, which were subsequently used for servomotor control. Fig. 5 shows the system response when the LM393 window comparator is incorporated, together with the complete control architecture, in which the signal is not continuous but is represented in discrete levels corresponding to the muscle activation states defined by the system.

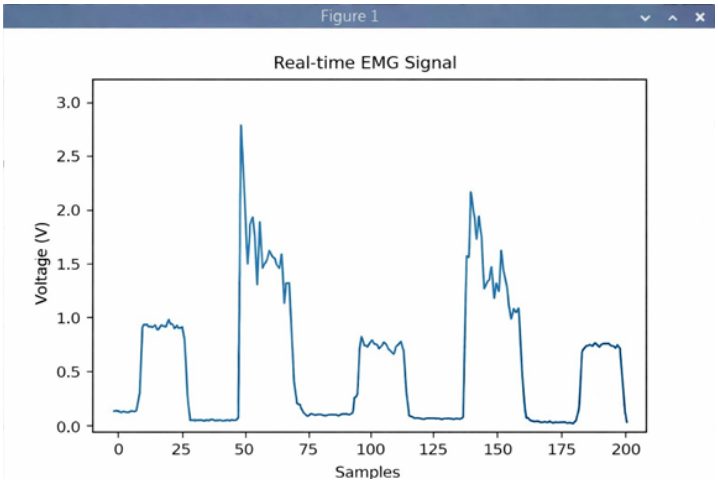

Fig. 6. *System response with contraction level classification.*
Source: own elaboration.

Unlike the signal obtained with low-pass filtering alone, the system output presents a well-defined discretization into three clearly differentiated levels. These levels correspond to the rest, medium contraction, and maximum contraction states, which are identified in the signal as low-amplitude regions, stable plateaus, and high-amplitude peaks, respectively. The rest regions are characterized by low and relatively constant values, indicative of significant muscle inactivity. Medium contraction appears as plateau-type segments, indicating sustained muscle activation; maximum contraction manifests as peaks of greater amplitude, associated with greater muscle effort.

The transitions between these states are well defined and consistent, which demonstrates the correct selection of the comparison thresholds established in the system.

Behavior of the control system

The behavior of the control system was evaluated based on the servomotor response to different detected muscle activation states. The system responds consistently to the signals from the LM393 comparator, with a clear correspondence between the rest, medium contraction, and maximum contraction states and the defined angular positions of the actuator.

Regarding sustained contractions, the classified signal presents stable plateau-type regions. This information allows the servomotor response to be adequately guided without perceptible oscillations. If the EMG signal presents rapid variations or transient peaks, the output will not be altered. Overall, the control system demonstrates stable responses to changes in muscle activation, which allows well-defined transitions between states without unwanted fluctuations in the actuator.

DISCUSSION

The results obtained confirm the operability and functionality of the designed myoelectric control system. The hybrid architecture based on analog conditioning, digital filtering, and discrete-logic classification made it possible to experimentally discriminate the rest, mild contraction, and strong contraction states, achieving stable servomotor actuation without significant oscillations. These findings validate the proposal as a viable, low-cost alternative for the development of myoelectric prostheses and experimentation platforms[16],[17].

In recent years, sEMG pattern recognition has moved toward machine learning and deep learning techniques, which combine multichannel information to discriminate gestures and movements with greater precision [17], [18]. Various studies employ advanced feature extraction algorithms and classifiers such as support vector machines (SVM) or artificial neural networks, achieving high accuracy rates in complex tasks [19], [20]. However, although these alternatives represent a substantial advance, they demand high computing capacity, as well as rigorous training phases with annotated databases and individualized

calibration [21], [22]. This increases algorithmic complexity and limits their direct implementation in resource-constrained embedded systems [23], [24], [25].

From a design perspective, the proposed architecture offers substantial advantages over more complex approaches. The integration of accessible commercial components (EGBO EMG sensor, MCP3008 converter, and Raspberry Pi 4) gave rise to a modular, reproducible, and scalable platform. By delegating primary classification to the analog comparator, digital processing focused on signal conditioning and storage, optimizing the use of computational resources without compromising stability during testing. This strategy is especially efficient when only a small number of muscle states need to be discriminated.

Despite these strengths, the system has limitations inherent to its discrete nature. The dependence on fixed thresholds via adjustable potentiometers exposes the classification to interindividual physiological variations, muscle fatigue, or shifts in electrode position. Likewise, the scope of the method is reduced to three activation levels, unlike artificial intelligence-based models that recognize a broader range of gestures and adapt better to dynamic conditions[17],[19].

However, the decoupled design between the acquisition, conditioning, and processing stages constitutes a solid basis for future improvements. This modular architecture allows pattern recognition algorithms or AI models to be progressively integrated without altering the capture hardware. In this way, discrete-logic classification can evolve toward machine learning schemes that expand the number of recognized degrees of freedom, while preserving the same electronic infrastructure.

In summary, combining analog conditioning with discrete classification yields a solution that is efficient in terms of computational load, stable, and accessible for myoelectric control applications. Although it is not intended to replace advanced clinical systems based on artificial intelligence, it does consolidate a flexible and scalable platform for prototyping in educational and research settings.

CONCLUSIONS

A low-cost sEMG signal acquisition and control system for myoelectric prostheses was designed and implemented. The platform acquires, conditions, and classifies the EMG signal into three discrete states of muscle contraction using a Raspberry Pi 4 processor, which commands an actuator through PWM signals.

The combination of an RC low-pass filter with a window comparator (LM393) showed that muscle activation levels can be identified accurately without resorting to complex digital processing. Likewise, the temporal validation strategy built into the control algorithm mitigates the oscillations associated with the non-stationary nature of the sEMG signal, which ensures a stable and consistent response of the actuator.

The main contribution of this work lies in the hybrid architecture (analog-digital), which significantly reduces the computational load and optimizes performance in embedded systems. This approach confirms the feasibility of implementing functional, stable, and accessible myoelectric control schemes for basic rehabilitation applications.

REFERENCES

[1] M. S. Hossain, M. J. Islam, and M. R. Islam, “Unraveling cemg-wet semg correlation dynamics: In- vestigating influential factors,” *Journal of Electromyography and Kinesiology*, vol. 78, p. 102912, 2024, doi:10.1016/j.jelekin.2024.102912.

[2] G. Balbinot, M. J. Wiest, G. Li, M. Pakosh, J. C. Furlan, S. Kalsi-Ryan, and J. Zariffa, “The use of surface emg in neurorehabilitation following traumatic spinal cord injury: A scoping review,” *Clinical Neurophysiology*, vol. 138, pp. 61–73, 2022, doi:10.1016/j.clinph.2022.02.028.

[3] F. Davarinia and A. Maleki, “Automated estimation of clinical parameters by recurrence quantification analysis of surface emg for agonist-antagonist muscles in amputees,” *Biomedical Signal Processing and Control*, vol. 68, p. 102740, 2021, doi:10.1016/j.bspc.2021.102740.

[4] L.-I. Hsu, K.-W. Lim, Y.-H. Lai, Y.-L. Lin, Y.-J. Chen, C.-S. Chen, and L.-W. Chou, “Turns- amplitude and power spectral analyses of surface emg for assessing muscle fatigue and recovery during dynamic hand gripping,” *Computers in Biology and Medicine*, vol. 193, p. 110430, 2025, doi:10.1016/j.compbiomed.2025.110430.

[5] E. R. Avila, S. E. Williams, and C. Disselhorst-Klug, “Advances in emg measurement techniques, analysis procedures, and the impact of muscle mechanics on future requirements,” *Journal of Biomechanics*, vol. 156, p. 111687, 2023, doi:10.1016/j.jbiomech.2023.111687.

[6] Z. Taghizadeh, S. Rashidi, and A. Shalbaf, “Finger movements classification based on fractional fourier transform coefficients extracted from surface emg signals,” *Biomedical Signal Processing and Control*, vol. 68, p. 102573, 2021, 1doi:10.1016/j.bspc.2021.102573.

[7] T. Mahboob, M. Y. Chung, and K. W. Choi, “Emg-based 3d hand gesture prediction using transformer encoder classification,” *ICT Express*, vol. 9, pp. 1047–1052, 2023, doi:10.1016/j.icte.2023.04.005.

[8] M. J. Karim, A. Khandakar, K. Thomas, A. Rahman, M. F. Ahamed, P. N. Suganthan, and M. A. Ayari, “Emg-based prosthetics control using explainable ai on edge devices,” Biomimetic Intelligence and Robotics, p. 100307, 2026, doi:10.1016/j.birob.2026.100307.

[9] P. Baraneedharan, S. Kalaivani, S. Vaishnavi, and K. Somasundaram, “Revolutionizing healthcare: Rasp- berry pi-powered health

monitoring sensors," *Computers in Biology and Medicine*, vol. 190, p. 110109, 2025, doi:10.1016/j.compbiomed.2025.110109.

[10] P. Tsakonas, N. D. Evans, J. Hardwicke, and M. J. Chappell, "A novel pipeline for converting surface electromyography signals into muscle activations," *Biomedical Signal Processing and Control*, vol. 102, p. 100204, 2026, doi:10.1016/j.bspc.2025.100204.

[11] S. A. Khomami and S. Shamekhi, "Persian sign language recognition using imu and surface emg sensors," *Measurement*, vol. 168, p. 108471, 2021, doi:10.1016/j.measurement.2020.108471.

[12] T. Ganokratana, M. Ketcham, and P. Pramkeaw, "A practical muscle-signal-driven control mechanism for an affordable robotic prosthetic hand," *Engineering Applications of Artificial Intelligence*, vol. 167, p. 113833, 2026, doi:10.1016/j.engappai.2026.113833.

[13] T. Sharma, K. P. Sharma, and K. Veer, "Decomposition and evaluation of semg for hand prostheses control," *Measurement*, vol. 186, p. 110102, 2022, doi:10.1016/j.measurement.2021.110102.

[14] Advancer Technologies, "Muscle Sensor v3 User Manual: Three-lead Differential Muscle/Electromyography Sensor for Microcontroller Applications," Advancer Technologies, User Manual, Feb. 2013.

[15] Y. A. Jarrah, M. G. Asogbon, O. W. Samuel, X. Wang, M. Zhu, E. Nsugbe, S. Chen, and G. Li, "High- density surface emg signal quality enhancement," *Biomedical Signal Processing and Control*, vol. 74, p. 103497, 2022, doi:10.1016/j.bspc.2022.103497.

[16] S. Ni, M. A. A. Al-qaness, A. Hawbani, D. Al-Alimi, M. Abd Elaziz, and A. A. Ewees, "A survey on hand gesture recognition based on surface electromyography," *Applied Soft Computing*, vol. 166, p. 112235, 2024, doi:10.1016/j.asoc.2024.112235.

[17] S. M. Sid'El Moctar, I. Rida, and S. Boudaoud, "Feature extraction techniques for semg classification," *IRBM*, vol. 45, p. 100866, 2024, doi:10.1016/j.irbm.2024.100866.

[18] L. Wang, J. Fu, H. Chen, and B. Zheng, "Hand gesture recognition using emg and accelerometer," *Biomed- ical Signal Processing and Control*, vol. 86, p. 105141, 2023, doi:10.1016/j.bspc.2023.105141.

[19] W. N. Abdelrazik, A. El-Bialy, H. A. Ibrahim, and B. A. Hemade, "Emg-based gesture recogni- tion with dimensionality reduction," *Sensors and Actuators A: Physical*, vol. 396, p. 117120, 2025, doi:10.1016/j.sna.2025.117120.

[20] V. Mej´ıa Gall´on, S. Madrid V´elez, J. Ram´ırez, and F. Bolan˜os, "Comparison of machine learning algo- rithms for emg activation timing," *Biomedical Signal Processing and Control*, vol. 94, p. 106266, 2024, doi:10.1016/j.bspc.2024.106266.

[21] R. Q. Fuentes-Aguilar, D. Llorente-Vidrio, L. Campos-Macias, and E. Morales-Vargas, "Sur- face electromyography dataset from hand movements," *Data in Brief*, vol. 57, p. 111079, 2024, doi:10.1016/j.dib.2024.111079.

[22] F. Reyes-Jim´enez, F. Rosas-Agraz, E. Macias-Naranjo, F. Alvarado-Rodr´ıguez, H. V´elez-P´erez, R. Romo- V´azquez, and E. Guzm´an-Quezada, "Eeg and emg dataset for movement-related potentials," *Data in Brief*, vol. 65, p. 112596, 2026, doi:10.1016/j.dib.2026.112596.

[23] M. Shankar and M. Tamilarasi, "Hand gesture classification using deep learning," *Journal of the Chinese Institute of Engineers*, vol. 49, no. 2, pp. 374–390, 2026, doi:10.1080/02533839.2025.2538513.

[24] L. Lin, Y. Dai, G. Zhang, Y. Ge, A. M. Mayet, X. Pan, G. Yang, and M. Lin, "Low-computational emg gesture recognition for prosthetic control," *Results in Engineering*, vol. 27, p. 106602, 2025, doi:10.1016/j.rineng.2025.106602.

[25] X. Li, L. Tian, Y. Zheng, O. W. Samuel, P. Fang, L. Wang, and G. Li, "Feature filtering tech- nique for myoelectric prostheses," *Biomedical Signal Processing and Control*, vol. 70, p. 102969, 2021, doi:10.1016/j.bspc.2021.102969.

[26] X. Li, Y. Liu, X. Zhou, Z. Yang, L. Tian, P. Fang, and G. Li, "Simultaneous motion recog- nition and force estimation," *Biomedical Signal Processing and Control*, vol. 85, p. 105044, 2023, doi:10.1016/j.bspc.2023.105044.

[27] J. Li, Z. Zhu, W. J. Boyd, C. Martinez-Luna, C. Dai, H. Wang, H. Wang, X. Huang, T. R. Farrell, and E. A. Clancy, "Virtual regression-based myoelectric control," *Biomedical Signal Processing and Control*, vol. 82, p. 104602, 2023, doi:10.1016/j.bspc.2023.104602.

[28] A. Leccia, M. Sallam, S. Grazioso, T. Caporaso, G. Di Gironimo, and F. Ficuciello, "Virtual simulator for myoelectric prosthesis prototype," *Engineering Applications of Artificial Intelligence*, vol. 121, p. 105853, 2023, doi:10.1016/j.engappai.2023.105853.

[29] F. Shabbir, M. Iqbal, A. Asghar, S. Khan, and S. J. Khan, "Six-degree-of-freedom prosthetic hand with emg control," *Engineering Applications of Artificial Intelligence*, vol. 142, p. 109949, 2025, doi:10.1016/j.engappai.2024.109949.

[30] N. N. Unanyan and A. A. Belov, "Upper limb prosthesis design using emg," *Biomedical Signal Processing and Control*, vol. 70, p. 103062, 2021, doi:10.1016/j.bspc.2021.103062.

[31] S. E. Mathe, H. K. Kondaveeti, S. Vappangi, S. D. Vanambathina, and N. K. Kumaravelu, "A com- prehensive review on applications of raspberry pi," *Computer Science Review*, vol. 52, p. 100636, 2024, doi:10.1016/j.cosrev.2024.100636.

ACKNOWLEDGMENTS

This work is a product of the Innova-GIoTM research seedbed of the Universidad Militar Nueva Granada.

FUNDING

The authors and the Innova-GIoTM research seedbed provided the funding.

CONFLICT OF INTEREST

None

AUTHORSHIP CONTRIBUTIONS

Writing – review and editing, writing – original draft, visualization, prototyping, analysis of results, conceptualization: Yeison Manuel Arias Nuñez.

Writing – review and editing, validation, conceptualization: Sandra Patricia Usaquen-Perilla.

Writing – review and editing, methodological advisor, prototyping, validation, conceptualization: Mauricio Alejandro Gómez-Figueroa.