ISSN: 1692-7257 - Volume 1 – Issue 47 - 2026

ORIGINAL

RCTA
Revista Colombiana de Tecnologías de Avanzada
UNIPAMPLONA

Analysis of geometric design criteria for the inlet channel and basin for gravity vortex turbines

Análisis sobre criterios de diseño geométrico del canal de entrada y cuenca para turbinas de vórtice gravitacional

Eduardo David Madrid Carrillo[1]
Juan Carlos Serrano Rico[2]
Elkin Gregorio Flórez Serrano[2]

[1] **Universidad de Antioquia, Facultad de Ingenierías, Ingeniería Mecánica, Medellín, Antioquia, Colombia.**
[2] **Universidad de Pamplona, Facultad de Ingenierías y Arquitectura, GIMUP, Pamplona, Norte de Santander, Colombia.**

Received: 01 August 2025. Revised: 01 October 2025. Accepted: 20 December 2025. Published: 01 January 2026.
Corresponding Author: Eduardo David Madrid Carrillo

How to cite: E. D. Madrid Carrillo, J. C. Serrano Rico, and E. G. Flórez Serrano, "Análisis sobre criterios de diseño geométrico del canal de entrada y cuenca para turbinas de vórtice gravitacional", *Revista Colombiana de Tecnologías de Avanzada (RCTA)*, vol. 1, no. 47, ene. 2026, art. no. 4307, doi: 10.24054/rcta.v1i47.4307

This work is licensed under a Creative Commons Attribution-NonCommercial 4.0 International License.

Abstract:

This article presents a review of the most relevant studies on inlet channels and basins used in gravitational vortex turbines, with the aim of identifying the geometric and operational parameters that control the formation, stability, and efficiency of the vortex. Cylindrical and conical configurations are analyzed, as well as variations in the geometry and inclination of the inlet channel, integrating experimental and numerical results to compare their influence on hydraulic performance. These findings allow the recognition of the most efficient design trends and the identification of innovative proposals that seek to optimize vortex generation and the overall performance of the turbine.

Keywords: Energy, channel, basin, turbine, vortex.

Resumen:

Este artículo presenta una revisión de los estudios más relevantes sobre los canales de entrada y las cuencas empleadas en turbinas de vórtice gravitacional, con el propósito de identificar los parámetros geométricos y operativos que controlan la formación, estabilidad y eficiencia del vórtice. Se analizan configuraciones cilíndricas y cónicas, así como variaciones en la geometría e inclinación del canal de entrada, integrando resultados experimentales y numéricos para comparar su influencia en el desempeño hidráulico. Estos hallazgos permiten reconocer las tendencias de diseño más eficientes e identificar propuestas innovadoras que buscan optimizar la generación del vórtice y el rendimiento global de la turbina.

Palabras clave: Energía, canal, cuenca, turbina, vórtice.

INTRODUCTION

Electricity generation in Colombia depends significantly on hydropower; however, to reduce codependency and diversify the energy matrix, the government promotes the development of non-conventional renewable energy sources, including small hydropower plants (SHP), solar, wind and biomass energy[1]. These SHP projects enable distributed generation, support regional electrification and contribute to a resilient and environmentally sustainable energy transition[2].

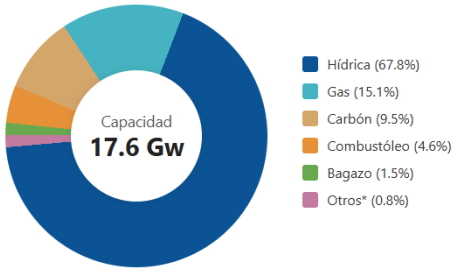

Fig. 1. *Types of energy sources according to the national energy matrix.*
Source: BBVA Research 2024 [1].

The gravitational vortex hydraulic turbine (GVT) is a low-head hydropower generation technology that extracts kinetic and potential energy from an artificially induced water vortex in a basin. A critical aspect in the performance of the GVT is the geometry and configuration of the inlet channel, which conducts the water flow from the source tangentially toward the vortex chamber or basin, ensuring efficient vortex formation and maximum energy conversion[3].

The water from the source is channeled from the edge and conducted toward the basin through an open inlet channel, which is responsible for directing the water flow tangentially toward the basin. In the basin, a gravity-induced vortex is generated, and the kinetic energy of the water is extracted by a vertical-axis turbine located at the center of the vortex, whose rotor rotates coaxially with it to harness this kinetic energy[4].

The inlet channel can be built as a horizontal or inclined channel, and in some cases it can be replaced by a pipe to facilitate its transport and installation. The width of the channel between both ends may be different or the same[5].

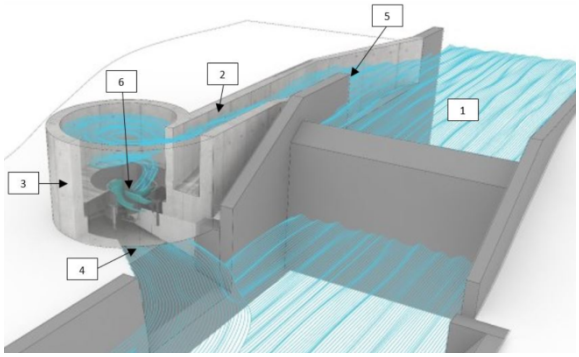

Fig. 2. *Parts of a gravitational vortex turbine.*
Source: Velásquez, L., Chica, E. and Posada, J. [4]

Fig. 2 depicts the GVT system, where 1 is the approach channel in which the flow is conducted in a controlled manner toward the structure. (2) defines the inlet channel that guides the flow toward the basin along an enveloping path, regulating the direction and the velocity distribution. (3) identifies the basin that ensures its correct transition toward the vortex formation zone, while (4) indicates the discharge orifice, through which the water leaves the system after transferring energy to the rotor. (5) shows the intake of the channel, and finally (6) corresponds to the rotor responsible for converting hydraulic energy into mechanical power[6].

The geometric configuration of the inlet channel is widely recognized as a critical factor influencing hydraulic efficiency and vortex formation in GVTs. Early experimental studies and field implementations established that the tangential inflow, induced by the channel, is essential for the formation of a stable free-surface vortex within the basin, directly affecting energy extraction and turbine performance[7].

Recent advances have focused on parametric analyses, using both experimental setups and computational fluid dynamics (CFD) simulations to define optimal configurations between the channel and the basin [8]. Velásquez et al. conducted a numerical investigation comparing tangential, wrapping, and direct pipe inlets, and found that a wrapping tangential channel

combined with a conical basin produces more symmetric and stable vortices, with higher kinetic energy in the core [9]. Similarly, studies have shown that the wrapping inlet, especially when the channel width is approximately half the basin height, improves vortex circulation [10].

The optimal geometric parameters, such as the width-to-diameter (w/D) and height-to-diameter (h/D) ratios, as well as the inlet wrapping angle, have been determined in previous studies through design of experiments and response surface methodologies, providing configurations with w/D between 0.2–0.3 and wrapping angles close to 180° that favor efficient energy transfer with minimal hydraulic losses[4],[11]. In addition, the basin taper and the precise alignment of the channel further influence vortex stability, as shown by advanced CFD studies that apply turbulence models to capture the flow structure[12].

The basin is one of the components with the largest number of studies, emphasizing the modification of its geometry and evolving from cylindrical to conical configurations, adjusting the characteristic parameters of each shape. Various studies such as that of Khan[13]conclude that in cylindrical basins, reducing the diameter causes an increase in the water level within it, although it simultaneously decreases the height of the air cone. Conversely, an excessive increase in the basin diameter generates significant friction losses, which allows a fraction of the flow to slide along the bottom without contributing efficiently to the energy conversion process[14].

This research will address a review of recent studies related to gravitational vortex turbines and their design parameters, starting from the geometric design of their inlet channel system and the basin shape that shows the best performance in vortex formation and energy utilization. The main objective is to study and propose an innovative model of inlet channel and basin that allows optimizing vortex generation, incorporating geometric improvements based on the advances and results reported in the current scientific literature. This review will encourage the integration of technical criteria and designs that enhance efficiency and vortex stability, thus contributing to the development of more effective technologies for low-impact hydraulic energy generation.

THEORETICAL FOUNDATIONS

The operation of GVTs is governed by open-channel hydraulics and by vortex dynamics within a confined basin. The geometry and alignment of the inlet channel directly induce a tangential velocity component that starts and sustains the free-surface vortex, which forms the core of the energy extraction process[4]. The channel design must ensure that the flow is redirected efficiently, from linear motion to rotational motion, with minimal energy losses; optimizing parameters such as the channel width (w), the head (h), the inlet angle and the wrap length (L) is therefore essential[15]. Vortex generation and flow behavior in hydraulic systems such as gravitational vortex turbines are commonly modeled with the fundamental equations of fluid dynamics, including the Navier-Stokes and continuity equations. These describe the motion of viscous, incompressible fluids and form the basis of numerical simulations. Turbulence models, such as the widely used k-ε and k-ω models, approximate the effects of turbulent eddies on the mean flow field and at the walls, which allows velocity distributions, vortex formation and pressure gradients to be predicted within the discharge chamber or basin and the inlet channel[16].

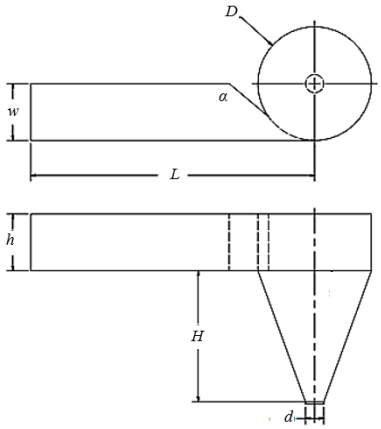

Fig. 3. *Geometric parameters of the gravitational vortex turbine (GVHT).*
Source: R. Gómez et al. [15]

Vortex generation and fluid flow behavior in hydraulic systems are governed by the fundamental equations of fluid dynamics, mainly the Navier-Stokes equations and the continuity equation.

$$\frac{\partial \rho}{\partial t} + \nabla \bullet (\rho u) = 0 \quad (1)$$

This equation establishes that the mass of the fluid is conserved over time. For incompressible fluids it simplifies to:

$$\nabla \bullet u = 0 \quad (2)$$

which means that the divergence of the velocity field u is zero, thus guaranteeing incompressible flow.

$$\rho\frac{Du}{Dt} = -\nabla p + \mu\nabla^2 u + \rho g \quad (3)$$

Where:

u= Fluid velocity vector

t= Time

ρ= Fluid density

p= Pressure

μ= Dynamic viscosity

g= Gravity

This equation represents the balance of forces acting on a fluid particle, including inertia, pressure, viscosity and gravitational forces.

Within the framework of seeking to harness the energy generated by vortex formation and by how the vortex behaves, the vorticity transport equation is described.

$$\frac{\partial\omega}{\partial t} + (u\bullet\nabla)\omega = (\omega\bullet\nabla)u + v\nabla^2\omega \quad (4)$$

Where $v=\frac{\mu}{\rho}$ is the kinematic viscosity. This is the equation that shows how vorticity is transported and diffused within the fluid. In a free vortex, the tangential velocity $v_\theta=\frac{K}{r}$ varies inversely proportional to the radius of the vessel in which it is generated. K being a constant related to the circulation.

In the context of a forced vortex, the fluid rotates as a solid body, so the tangential velocity varies linearly with the radius.

$$v_\theta = \omega r \quad (5)$$

Where ω is the angular velocity.

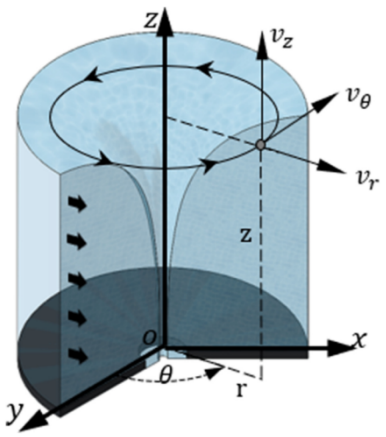

Fig. 4. *Physics of vortex formation.*
Source: Dhakal, et al. [16].

These behaviors govern the velocity distribution in different types of vortices found in hydraulic turbines.

The turbulence models described above (k-ε and k-ω) are widely used as two-equation turbulence models, based on the Reynolds-averaged Navier-Stokes equations. Both models introduce two additional transport equations to represent the effects of turbulence in fluid flows, which allows closure of the RANS equations and practical simulation of turbulent phenomena in engineering applications[17].

The fundamental principle of the k-ε model is the calculation of the turbulent viscosity from *k* and ε, under the assumption

of isotropic turbulence and based on empirical constants. The k-ε model is robust and generally suitable for fully developed flows, free shear layers and flows far from the walls. However, its accuracy decreases in cases with adverse pressure gradients, strong separations or in regions close to the walls, unless wall functions or improved variants (such as the realizable k-ε or the RNG k-ε) are used.

Its transport equations are defined as (6) and(7):

$$\frac{\partial k}{\partial t} + (u \bullet \nabla)k = P_k - \epsilon + \nabla \bullet \left[\left(v + \frac{v_t}{\sigma_k} \right) \nabla k \right] \quad (6)$$

$$\frac{\partial \epsilon}{\partial t} + (u \bullet \nabla)\epsilon = C_{1\epsilon} \frac{\epsilon}{k} P_k - C_{2\epsilon} \frac{\epsilon^2}{k} + \nabla \bullet \left[\left(v + \frac{v_t}{\sigma_\epsilon} \right) \nabla \epsilon \right] \quad (7)$$

Where P_k is the turbulence production term and v_t is the turbulent viscosity, with the other terms being the empirical constants.

The k-ω model generally offers greater accuracy in the near-wall region compared with the k-ε model, since ω is less affected by the distance to the wall and remains valid near the boundaries. It is especially effective for simulating flows with boundary layers, separation and complex surfaces. For broader applicability and greater stability in free shear flows, the Shear Stress Transport (SST) k-ω variant combines the k-ε and k-ω approaches, achieving optimal performance throughout the flow domain[17].

The transport equations for this model are:

$$\frac{\partial k}{\partial t} + (u \cdot \nabla)k = P_k - \beta^* k \omega + \nabla \cdot [(\nu + \sigma_k \ \ v_t) \nabla k] \quad (8)$$

$$\frac{\partial \omega}{\partial t} + (u \cdot \nabla)\omega = \alpha \left(\frac{\omega}{k}\right) P_k - \beta \omega \hat{} 2 + \nabla \cdot [(\nu + \sigma_\omega \ \ v_t) \nabla \omega] \quad (9)$$

Where α, β, β*, σ_k, σ_ω are empirical constants of the model, and the production term P_k and the turbulent viscosity are defined in a similar manner[18].

METHODOLOGY

Rahman et al.[19]carried out a comprehensive analysis of how channel inclination affects flow behavior in gravitational vortex systems, evaluating inclination angles of 0°, 30° and 60°. Their study combined experimental observations with numerical simulations in order to analyze how these angles influenced key hydraulic variables, such as flow velocity profiles, vortex formation and overall turbine efficiency.

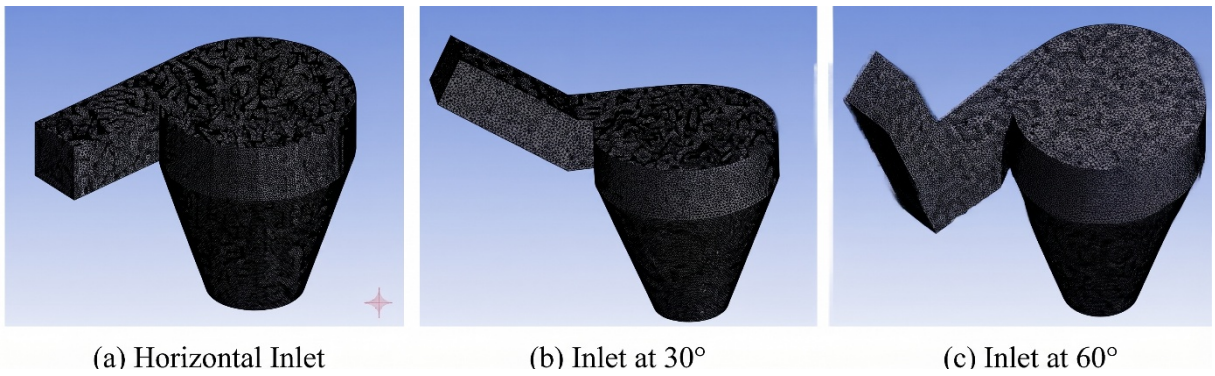

Fig. 5. *Inlet channels with inclination at different angles.*
Source: Rahman et al. [19].

As they progressively increased the inclination angle, they observed significant changes in the development and intensity of the vortex within the basin; for example, larger inclination angles tended to promote a more concentrated inlet jet and a higher tangential velocity in the vortex core, whereas smaller angles produced a wider, less concentrated inlet.

The results showed that an appropriate choice of channel inclination angle can be a decisive factor in optimizing vortex stability and maximizing hydroelectric generation, since each angular configuration modifies the velocity distribution and the pressure field within the vortex chamber. These findings provide valuable geometric criteria for the optimal design of gravitational vortex turbines[19].

Another configuration for the upper fluid inlet into the basin is the one studied by Havaldar et al. Their research analyzed

two geometric configurations for the inlet channel: a straight, inclined channel and a curved channel. In particular, the curved channel followed a path based on the brachistochrone curve within a vertical plane[20].

This curve, also known as the "curve of fastest descent," optimizes the flow path by minimizing the travel time of the fluid particles moving from the highest point of the channel inlet to the basin. This optimized path allows the fluid particles to reach higher velocities on their way to the basin, which favors vortex formation and improves the efficiency of energy extraction in gravitational vortex systems.

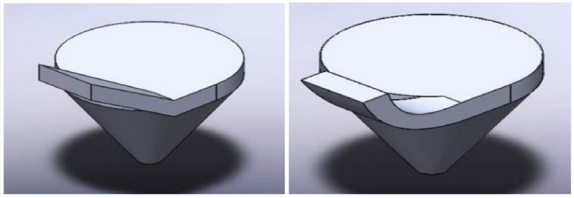

Fig. 6. *Geometric configurations of the inlet channel with straight and curved inclination.*
Source: Havaldar et al. [20].

Thapa et al. conducted a detailed study to investigate the influence of inlet channel geometry on vortex formation in a low-head gravitational vortex turbine (GVT). In their numerical analysis, they used ANSYS Fluent ® software to simulate flow behavior under different geometric configurations. The study evaluated four distinct inlet channel shapes: triangular, rectangular, circular and curved. The results of the experimental and numerical analysis revealed that vortex formation induces forces on the turbine shaft, which negatively impacts operating efficiency. Notably, the rectangular channel generated a highly symmetric pressure field with high pressure values, which indicates its suitability for low-head systems. However, under high-head conditions, such a pressure distribution could generate unexpected bending moments on the turbine shaft, increasing the risk of structural failure.

By contrast, the triangular inlet geometry showed higher efficiency, since it favored a symmetric vortex pattern that minimizes radial forces. These radial forces are the main cause of bending moments induced in the shaft, which can compromise structural integrity. The triangular geometry therefore represents a promising design approach for improving the mechanical stability and performance of gravitational vortex turbines[21].

As for the basin or discharge chamber, as some studies indicate, research by Sharif has shown that in cylindrical basins a reduction in diameter raises the water level within the basin, which means a decrease in the height of the air cone. By contrast, an excessive increase in diameter generates losses due to friction, so that a fraction of the flow slides along the bottom without contributing efficiently to energy conversion[22].

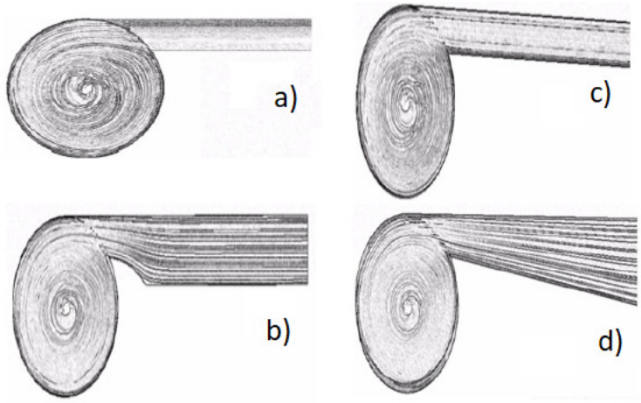

Fig. 7. *Geometric configurations of the inlet channel and vortex formation in terms of flow.*
Source: Thapa et al. [21].

Similarly, Chattha conducted studies based on numerical simulations and experiments with basins of conical geometry, which helped them show that the best operating results are obtained when the vortex and the air cone generated reach the same height as the basin, that is, when the latter extends to the bottom of the basin[23].

Dhakal carried out simulations in a basin of conical geometry, keeping both the height and the upper diameter D fixed while modifying the discharge diameter d and the cone angle, parameters that are directly linked. The purpose of the study was to preserve the d/D ratio within the range of 14 % to 18 %, since this range favors adequate vortex formation. The results showed that an increase in the inclination of the basin produced higher flow velocities, and the highest outlet velocities were

reached when the d/D ratio approached 18 %[24].

The modifications proposed by Sánchez were based on the premise that the basin is the most critical component within a gravitational vortex turbine system. Recognizing the importance of this section for the overall performance of the system, the authors made specific adjustments to the geometry of the discharge cone in order to optimize the hydraulic efficiency and the outlet velocity of the fluid. In particular, two different geometric configurations were incorporated: one concave and one convex. These modifications were evaluated in a scaled experimental setup, which allowed a detailed analysis of how each design influences the flow characteristics and, therefore, the energy efficiency of the system. The results provide valuable information for the design and improvement of GVT, showing that small variations in geometry can have a significant impact on overall performance[25].

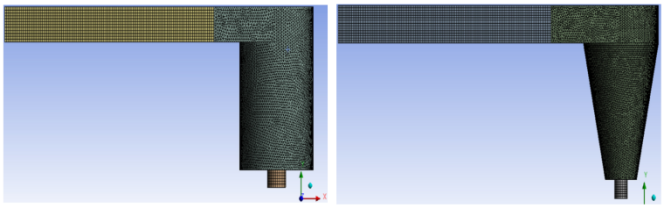

Fig. 8. *Cylindrical and conical basins studied by numerical simulation methods.*
Source: Dhakal et al. [24].

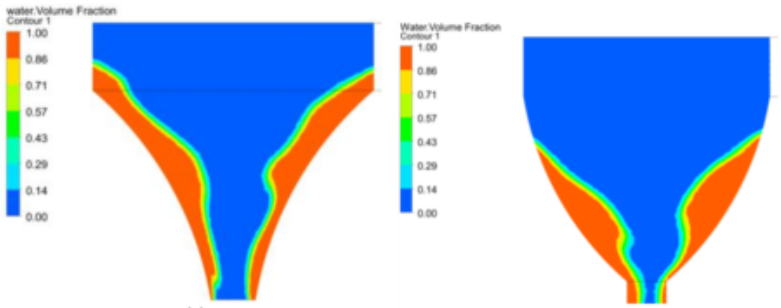

Fig. 9. *Conical basins with concave and convex cross-section.*
Source: Sánchez et al. [25].

According to Velásquez, a study carried out using a multi-objective methodology to optimize the geometry of the channel and basin system of a GVT shows advances in vortex formation and the circulation achieved, implementing an enveloping channel that surrounds the inlet to the basin and an elongated conical basin, with the model evidenced in the same figure. They concluded in their study that the circulation and volumetric flow rate were 1.6999 [m²/s] and 0.0030 [m³/s], respectively. Since the geometric parameters selected were dimensionless, these results allowed them to generate new geometries[26].

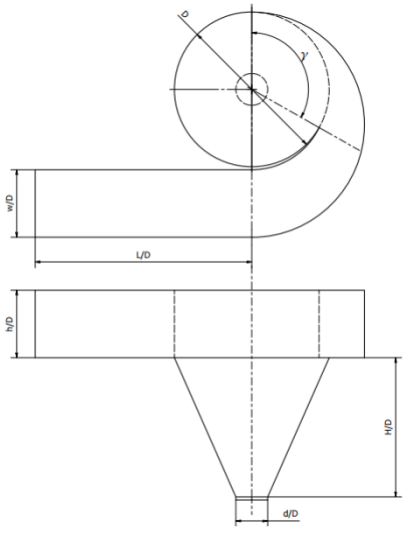

Fig. 10. *Geometry and dimensionless parameters of channel and basin.*
Source: Velásquez et al. [24].

RESULTS

The geometric parameters involved in the design affect vortex formation, energy conversion efficiency and flow stability within the system. These parameters include the geometry of the inlet channel, the shape and dimensions of the vortex basin, the rotor configuration and the characteristics of the discharge channel.

Table 1: Geometric parameters studied according to the literature for cylindrical basin

d/D	H/D	w/D	h/D	L/D
0.19	0.23	0.31	-	-
0.20	1.00	-	-	-
0.30	1.00	-	-	-
0.28	1.38	0.28	0.43	3.90
0.20	1.00	-	-	-
0.05	1.00	-	-	-
0.20	0.20	0.40	0.30	1.00
0.05	1.40	-	-	-
0.06	0.83	0.23	0.63	0.63
0.10	0.80	0.20	0.20	0.47
0.10	0.90	0.25	0.25	0.57
0.40	0.90	0.25	0.25	0.57
0.20	1.00	-	-	-
0.18	1.25	-	-	1.28
0.16	1.00	-	0.02	-

Source: Velásquez et al. [27]

The compiled tables synthesize the geometric, operational and performance parameters reported in studies that analyze cylindrical and conical basins used in GVTs. They concentrate the most widely used dimensionless ratios, obtained through simulations and experimental tests.

Table 2: Geometric parameters studied according to the literature for conical basin

d/D	H/D	w/D	h/D	L/D
0.15	0.83	-	-	-
0.15	2.08	-	-	-
0.17	1.42	-	-	-
0.15	0.27	0.27	1.82	0.14
0.15	1.44	0.50	2.81	0.25
0.22	1.00	0.22	3.20	0.11
0.23	0.75	0.50	4.00	0.25
0.23	0.75	0.50	4.00	0.25
0.30	0.90	0.25	5.00	0.28
0.22	1.14	0.50	4.00	0.25
0.05	1.42	0.50	2.83	0.25
0.06	0.90	0.50	1.50	0.13
0.22	1.22	0.32	0.45	-

Source: Velásquez et al. [27]

Studies presented at the International Conference on Renewable Energies and Power Quality 24 (ICREPQ'24) have proposed innovative lines of research aimed at optimizing the hydraulic efficiency of gravitational vortex turbines. This proposal involves incorporating geometries inspired by configurations traditionally used in wind tunnels, particularly those designed to induce more uniform velocity profiles, reduce energy losses, and control pressure gradients within complex flow conduits. This geometric adaptation seeks to establish a conceptual bridge between conical and cylindrical basin designs, integrating the advantages that each offers in terms of vortex stability, flow concentration, and reduced energy dissipation.

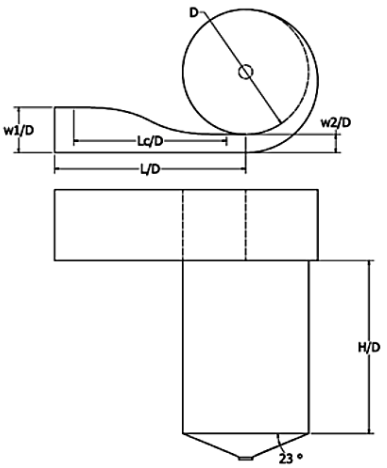

Fig. 11. *Geometry of the channel and the basin with contraction adaptations at the inlet and conical and cylindrical basin. Source: Madrid et al. [28].*

The approach presented at ICREPQ suggests that a hybrid geometry, derived from the aerodynamic principles applied in wind tunnels and adjusted to the hydraulic requirements specific to gravitational vortex turbines (GVT), can favor the generation of a more uniform and stable vortex, minimizing unwanted separation or recirculation zones. Likewise, this type of design could help reduce losses due to friction and excessive turbulence, which is particularly relevant for low- and medium-head hydraulic systems. Taken together, these developments represent a promising alternative for advanced basin design, opening the door to new configurations that combine aerodynamic and hydraulic criteria in order to maximize the energy performance of gravitational vortex turbines[28].

CONCLUSIONS

The studies analyzed show that configurations based on conical basins perform better in terms of vortex stability, velocity distribution, and overall efficiency. It has also been demonstrated that certain geometric adaptations independent of the basin shape can introduce substantial improvements in the vortex formation process. These configurations favor a more orderly inlet with a greater tangential component, which intensifies the vortex structure and reduces energy losses due to unwanted turbulence. Taken together, the results suggest that, although the conical basin remains the most efficient option, its performance can be notably enhanced through an adequate design of the inlet channel.

REFERENCES

[1] A Reyes, M P Castañeda, “Colombia necesita avanzar hacia una diversificación de fuentes de energía”, *BBVA Res.*, vol. 33, no. 2, abr. 2024, art. No. 034251, doi: 10.1109.BBVA.034251.

[2] S Álvarez, “El Desafío Energético de Colombia y el Rol Crucial de las PCH”, *GSV Ingeniería*, vol. 8, no. 2, may. 2024, art. No. 002921, doi: 10.1109.GSV.002921.

[3] DF Ayala, JG Criollo, “Implementación de una turbina hidráulica de vórtice de agua gravitacional,” *Rev. UIS Ingenierías*, vol. 22, no. 2, jul. 2023, art. No. 13678, doi: 10.1109.UIS.13678.

[4] L. Velásquez, E. Chica, J. Posada, “Implementación de una turbina hidráulica de vórtice de agua gravitacional en Colombia: potencial hidroeléctrico y perspectivas,” *Rev. UIS Ingenierías*, vol. 22, no. 3, pp. 39–54, jul. 2023, doi: 10.18273/revuin.v22n3-2023004.

[5] M. Ayala, H. Benavides, C. Riba, “Sistema de generación energía sumergible basado en un vórtice gravitacional con sifón para comunidades aisladas”, Rev. Técnica “energía”, no. 12, ene. 2016, pp. 304–312, doi: 10.1109.CENACE.0055.

[6] D. Fernández, J. Gómez, “Implementación de una turbina hidráulica de vórtice de agua,” *Rev. UIS Ingenierías*, vol. 22, no. 2, jul. 2023, art. No. 13678, doi: 10.1109.UIS.13678.

[7] L. Velásquez, J. P. Rengifo, J. Urrego, A. Rubio-Clemente, E. Chica, “Experimental Assessment of Hydrodynamic Behavior in a Gravitational Vortex Turbine with Different Inlet Channel and Discharge Basin Configurations”, *Energies*, vol. 17, no. 22, Nov. 2024, art. 5773, doi: 10.3390/en17225773.

[8] L. Velásquez, A. Posada, E. Chica, “Optimization of the basin and inlet channel of a gravitational water vortex hydraulic turbine using the response surface methodology”, *Renewable Energy*, vol. 187, 2022, pp. 508-521.

[9] L. I. Velásquez García, A. Rubio-Clemente, E. Chica, “Numerical analysis of the inlet channel and basin geometries for vortex generation in a gravitational water vortex power plant”, Galería TDEA, 2020.

[10] V. J. Alzamora Guzmán, J. A. Glasscock, “Analytical solution for a strong free-surface water vortex describing flow in a full-scale gravitational vortex hydropower system”, *Water Sci. Eng.*, vol. 14, no. 4, Mar. 2021, art. no. 72, doi: 10.1016/j.wse.2021.03.004.

[11] Abdul S. Saleem, Taqi A. Cheema, Rizwan Ullah, Sarvat M. Ahmad, Javed A. Chattha, Bilal Akbar, Cheol W. Park, “Parametric study of single-stage gravitational water vortex turbine with cylindrical basin”, *Energy*, vol. 200, 2020, art. 117464, doi: 10.1016/j.energy.2020.117464.

[12] E. Septyaningrum, R. Hantoro, N. K. Mouti, W. R. Rahayu, S. Sutardi, “Gravitational Vortex Water Turbine (GVWT) conical basin design: the effects of cone angle and outlet diameter on vortex characteristics”, *J. Mech. Eng. (JMechE)*, vol. 21, no. 1, ene. 2024, pp. 177–198, doi: 10.24191/jmeche.v21i1.25366.

[13] N. H. Khan, T. A. Cheema, J. A. Chattha, C. W. Park, “Effective basin–blade configurations of a gravitational water vortex turbine for microhydropower generation”, *J. Energy Eng.*, vol. 144, no. 4, Abr. 2018, art. 04018042, doi: 10.1061/(ASCE)EY.1943-7897.0000558.

[14] S. R. Sreerag, C. K. Raveendran, B. S. Jinshah, “Effect of outlet diameter on the performance of gravitational vortex turbine with conical basin”, *J. Scientific & Engineering Research*, vol. 7, no. 4, 2016, pp. 457–463.

[15] R. Gómez, L. Velásquez, A. Rubio-Clemente, E. Chica, “Design Optimization of an Inclined Inlet Channel, an Archimedean Spiral Basin, and a Discharge Cone in a Gravitational Vortex Turbine”, *Processes*, vol. 13, no. 5, May 2025, art. 1533, doi: 10.3390/pr13051533.

[16] R. Dhakal, T. R. Bajracharya, S. R. Shakya, B. Kumal, S. Williamson, K. Khanal, S. Gautam, D. P. Ghale, “Computational and Experimental Investigation of Runner for Gravitational Water Vortex Power Plant”, en Proc. 2017 IEEE 6th International Conference on Renewable Energy Research and Applications (ICRERA), San Diego, 2017, pp. 365–373, doi: 10.1109/ICRERA.2017.8191087.

[17] T. A. Cheema, N. H. Khan, C.-W. Park, “CFD-based performance evaluation of a gravitational water vortex turbine with optimized basin geometry”, *J. Mech. Sci. Technol.*, vol. 33, no. 4, Apr. 2019, pp. 1771–1782, doi: 10.1007/s12206-019-0329-0.

[18] D. C. Wilcox, “Reassessment of the scale-determining equation for advanced turbulence models”, *AIAA J.*, vol. 26, no. 11, Nov. 1988,

pp. 1299–1310, doi: 10.2514/3.10041.

[19] M. M. Rahman, J. Jian-Hong, F. Mohd Tamiri, "Effects of Inlet Flow Rate and Penstock's Geometry on the Performance of Gravitational Water Vortex Power Plant", Proc. Int. Conf. Ind. Eng. Oper. Manag. (IEOM), 2018.

[20] S. N. Havaldar, P. A. Gadekar, S. M. Baviskar, N. M. Jadhav, S. H. Inamdar, "Analyzing Geometries for Inlet Flow Channels to Gravitational Water Vortex Chamber", Int. J. Res. Eng. App. & Manag. (IJREAM), Special Issue AMET-2019.

[21] Thapa, D., Mishra, A., & Sarath, K. S., "Effect of Inlet Geometry in the Quality of Vortex Formed Using Vortex Flow Channel", *Int. J. Mech. Eng. Technol. (IJMET)*, vol. 8, no. 5, 2017, pp. 515–524.

[22] A. Sharif, C. Siddiqi, et al., "Enhancing the performance of Gravitational Water Vortex Turbine", Journal of Technology Innovations & Energy, 2023, donde también se discuten efectos geométricos de la cuenca.

[23] J. A. Chattha, T. A. Cheema, N. H. Khan, "Numerical investigation of basin geometries for vortex generation in a gravitational water vortex power plant", Proc. 2017 8th International Renewable Energy Congress (IREC), IEEE, 2017, pp. 1-5, doi: 10.1109/IREC.2017.7926028.

[24] S. Dhakal, A. B. Timilsina, R. Dhakal, D. Fuyal, T. R. Bajracharya, H. P. Pandit, "Comparison of cylindrical and conical basins with optimum position of runner: Gravitational water vortex power plant", *Renew. Sustain. Energy Rev.*, vol. 48, pp. 662-669, 2015, doi: 10.1016/j.rser.2015.04.030.

[25] A. R. Sánchez, J. A. Sierra Del Rio, A. J. Guevara-Muñoz, J. A. Posada, "Numerical and Experimental Evaluation of Concave and Convex Designs for Gravitational Water Vortex Turbine", *J. Adv. Res. Fluid Mech. Thermal Sci.*, vol. 64, no. 1, 2019, pp. 160-172, doi: 10.37934/arfmts.64.1.160172.

[26] L. Velásquez, A. Posada, & E. Chica, "Surrogate modeling method for multi-objective optimization of the inlet channel and the basin of a gravitational water vortex hydraulic turbine," *Appl. Energy*, vol. 330, 2023, art. 120357, doi: 10.1016/j.apenergy.2022.120357.

[27] L. Velásquez, A. Posada, E. Chica, "Optimization of the basin and inlet channel of a gravitational water vortex hydraulic turbine using the response surface methodology", *Renew. Energy*, vol. 187, no. (–), Apr. 2022, pp. 508-521, doi: 10.1016/j.renene.2022.01.113.

[28] E. D. Madrid, J. C. Serrano, E. G. Flórez, "Optimization for the inlet channel and basin of a gravitational vortex turbine through the maximization of circulation", *RE&PQJ*, vol. 22, no. 5, Ago. 2024, art. 4021, doi: 10.52152/4021.

FUNDING

No financing

CONFLICT OF INTEREST

None

AUTHORSHIP CONTRIBUTIONS

Drafting – original draft: Eduardo David Madrid Carrillo, Juan Carlos Serrano Rico, Elkin Gregorio Flórez Serrano.

Writing–review and editing: Eduardo David Madrid Carrillo, Juan Carlos Serrano Rico, Elkin Gregorio Flórez Serrano.